Pantograph Down 2000

Express Plus DC Fast Charging Platform for Electric Buses

Installation Guide For Pantograph Down Mast Configuration

IMPORTANT SAFETY INSTRUCTIONS

SAVE THESE INSTRUCTIONS

This manual contains important instructions for Express Plus that shall be followed during installation, operation and maintenance of Express Plus modular products.

WARNING:

1. **Read and follow all warnings and instructions before servicing, installing, or operating the ChargePoint® product.** Install and operate only as instructed. Failure to do so may lead to death, injury, or property damage, and will void the Limited Warranty.
2. **Only use licensed professionals to install your ChargePoint product and adhere to all national and local building codes and standards.** Before installing the ChargePoint product, consult with a licensed contractor, such as a licensed electrician, and use a trained installation expert to ensure compliance with local building and electrical codes and standards, climate conditions, safety standards, and all applicable codes and ordinances. Inspect the product for proper installation before use.
3. **Always ground the ChargePoint product.** Failure to ground the product can lead to risk of electrocution or fire. The product must be connected to a grounded, metal, permanent wiring system, or an equipment grounding conductor shall be run with circuit conductors and connected to the equipment grounding terminal or lead on the Electric Vehicle Supply Equipment (EVSE). Connections to the EVSE shall comply with all applicable codes and ordinances.
4. **Install the ChargePoint product using a ChargePoint-approved method.** Failure to install on a surface that can support the full weight of the product can result in death, personal injury, or property damage. Inspect the product for proper installation before use.
5. **The product is not suitable for use in Class 1 hazardous locations, such as near flammable, explosive, or combustible vapors or gases.**
6. **Supervise children near this device.**
7. **Do not put fingers into the electric vehicle connector, or touch fingers to charging rails.**
8. **Do not use this product if any cable is frayed, has broken insulation, or shows any other signs of damage.**
9. **Do not use this product if the enclosure or the electric vehicle connector is broken, cracked, open, or shows any other signs of damage.**
10. **Wire and wire terminal information are provided in the ChargePoint product Site Design Guide and Installation Guide.**
11. **Torques for installation of wire terminals are provided in the ChargePoint product Installation Guide.**
12. **The ChargePoint product maximum operating temperature is 50 °C (122 °F).**
13. **Site operator is responsible for making sure that no mechanical damage occurs and the pantograph is installed in a location that doesn't present a safety risk.** If used carelessly, the pantograph could critically injure someone just from the extension force.

IMPORTANT: Under no circumstances will compliance with the information in a ChargePoint guide such as this one relieve the user of the responsibility to comply with all applicable codes and safety standards. This document describes approved procedures. If it is not possible to perform the procedures as indicated, contact ChargePoint. **ChargePoint is not responsible for any damages that may result from custom installations or procedures not described in this document or that fail to adhere to ChargePoint recommendations.**

Document Accuracy

The specifications and other information in this document were verified to be accurate and complete at the time of its publication. However, due to ongoing product improvement, this information is subject to change at any time without prior notice. For the latest information, see our documentation online at chargepoint.com/guides.

Copyright and Trademarks

©2013-2025 ChargePoint, Inc. All rights reserved. This material is protected by the copyright laws of the United States and other countries. It may not be modified, reproduced, or distributed without the prior, express written consent of ChargePoint, Inc. ChargePoint and the ChargePoint logo are trademarks of ChargePoint, Inc., registered in the United States and other countries, and cannot be used without the prior written consent of ChargePoint.

Symbols

This guide and product use the following symbols:

DANGER: Risk of electric shock

WARNING: Risk of personal harm or death

CAUTION: Risk of equipment or property damage

IMPORTANT: Crucial step for installation success

Read the manual for instructions

Ground/protective earth

Illustrations Used in This Document

The illustrations used in this document are for demonstration purposes only and may not be an exact representation of the product. However, unless otherwise specified, the underlying instructions are accurate for the product.

Contents

Important Safety Instructions ii

1 Introduction **1**
- Pantograph Down 2000 Components 1
- Document Scope 2
- System Overview 3
- Safety Warning 9
- Express Plus Guides 9
- Questions 10

2 Prepare for Installation **11**
- Check Site Readiness 11
- Bring These Tools and Resources 12
- Tightening Torques 22
- Pantograph Down 2000 Packages 25
- Disconnect Power 32

3 Mount Mast **34**
- Parts Needed 35
- Install Leveling Nuts 35
- Mount Mast 37
- Raise and Connect Arm 41
- Remove Pivot Hinges 44
- Remove Arm Shipping Fixture 47
- Remove Support Column 49
- Open Mast Door 51
- Remove Support Bridge 53
- Install Mast Ground Bar 55
- Install Knockout Cover 56
- Pull Low Voltage Cables 57

4 Mount Schunk 201 Pantograph **59**
Uncrate and Prepare Pantograph 60
Prepare Mounting Clamps 62
Mount Pantograph 63

5 Mount Power Link 2000 and PD Controller **68**
Parts Needed 69
Install Power Link 2000 Mounting Base 69
Lift Power Link 2000 72
Open Power Link 2000 74
Save Parts 75
Prepare Power Link 2000 Gland Plate 76
Mount Power Link 2000 79
Connect Power Link 2000 HV DC Output Conduit 81
Install PD Controller Mounting Struts 83
Mount PD Controller 84
Connect Remaining Power Link 2000 Conduits 89
Open PD Controller 90
Connect PD Controller Conduits 91

6 Connect Power Link 2000 Wires **92**
Parts Needed 93
Wiring Overview 93
Pull, Cut, and Connect Wires 95

7 Install Power Link 2000 Options **118**
Ethernet to USB Kit 119
Soft Shutdown Switch 129

8 Connect Schunk SLS 201.102 Wires **133**
Wiring Overview 134
Parts Needed 135
Connect HV DC Wires 135
Connect Pantograph Frame Ground Wires 137
Connect LV DC Cables 139

9 Mount Auxiliary Components to Schunk SLS 201 ..... **149**
Overview and Parts Needed 150
Install Side Rails 151
Install Wi-Fi and RFID Antenna Assemblies 153
Install Front Cover And Status LED 155
Save Parts 158

10 Connect Auxiliary Component Cables **159**
Parts Needed 160
Connect RFID Antenna Cable 160
Connect Wi-Fi Antenna Cable 161
Connect Status LED Cable 161
Connect Auxiliary Frame Ground Wire 163

11 Connect PD Controller Wires **164**
Wiring Overview 165
Parts Needed 166
Connect AC Input Wires 166
Connect LV DC and Ethernet Wires 172
Connect Antenna Cables 177
Connect Controller Interface Cable Wires 179

12 Connect Mast Wires **190**
Parts Needed 191
Wiring Overview 191
Connect Wires at Mast Ground Bar 191
Connect Wire at Mast Arm 193

13 Complete the Install **195**
Complete Schunk SLS 201.102 Auxiliary Components Frame 195
Close Power Link 2000 200
Close and Lock PD Controller 204
Install Mast Panels and Covers 205
Seal Conduits 213
Close Door 214

14 Recommended Checklist **216**
Third-Party Service Providers 218
Questions 219

A Appendix: Low Voltage Wire Reference **220**
RFID and Wi-Fi Antenna Cable 220
Controller Interface Cable Schunk SLS 201.102 222
Pantograph Frame to Auxiliary Frame Ground Wire 225
Power Link 2000 to PD Controller LV DC Wire Assembly 226

B Appendix: Set Up Power Link 2000 ..... **228**
Power On 228
Set Up Power Link 2000 228

Introduction 1

Pantograph Down 2000 Components

Express Plus Pantograph Down 2000 is a modular solution for scalable fast charging of electric buses in the depot or on-route. There are two Pantograph Down 2000 installation configuration types. The mast configuration offers an integrated structural solution while the overhead configuration is suitable for any site design that mounts the system components to site structures. The solution comprises the following product components, shown below in overhead charging configuration:

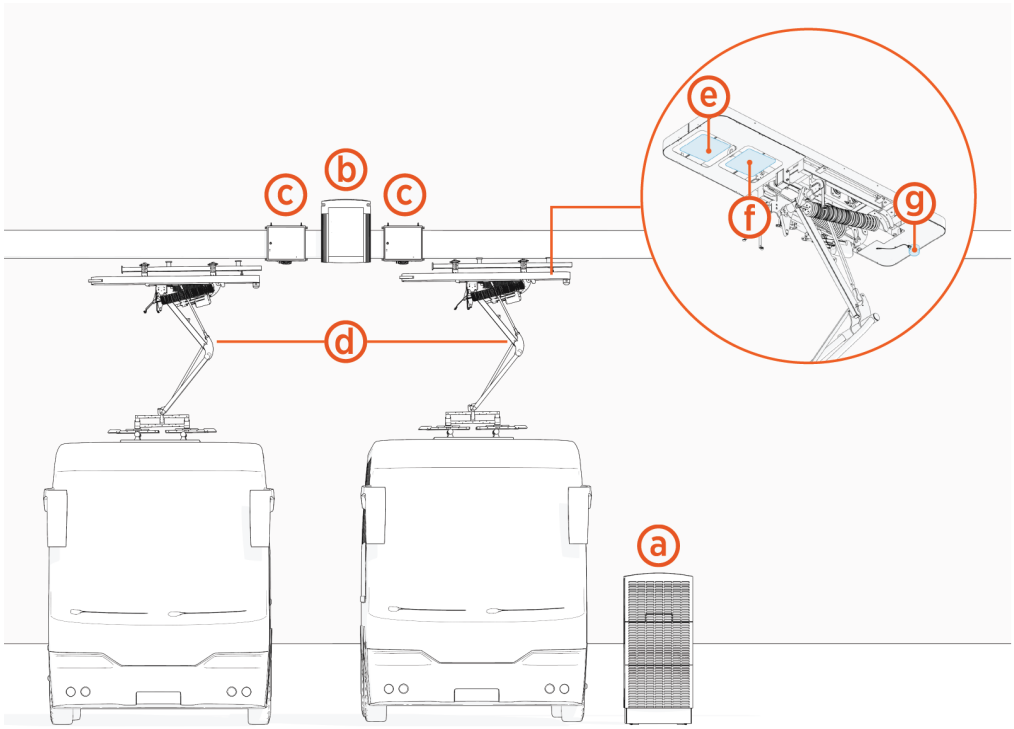

(a) Power Block: Power cabinet that houses AC to DC power converters called Power Modules. Supplies DC output power to Power Link 2000s. Each Power Block can output up to 200 kW of power.

(b) Power Link 2000: Dispenser that communicates with the bus during charging, connects to the ChargePoint Platform, and dispenses high voltage DC power to the bus through a pantograph connector.

(c) PD Controller: Smart interface that enables a Power Link 2000 to control a pantograph and to monitor the control pilot. Also hosts the Wi-Fi access point and RFID reader that enables wireless charging communication with the bus.

(d) Pantograph: Electromechanical connector that lowers onto bus charging rails and delivers high voltage DC charge power to the bus. Raises out of the way when not in use.

(e) Wi-Fi antenna: Antenna for wireless communication between the bus and the Pantograph Down 2000 system.

(f) RFID antenna: Antenna for bus RFID tag identification.

(g) Status LED: LED status indicator for the Power Link 2000 charging port.

Pantograph Down 2000 also supports charging with the Pantograph Down Mast, shown below. This is a structure that fully encloses a Power Link 2000 and PD Controller within its column and supports a pantograph, Wi-Fi antenna, RFID antenna, and status LED on its arm.

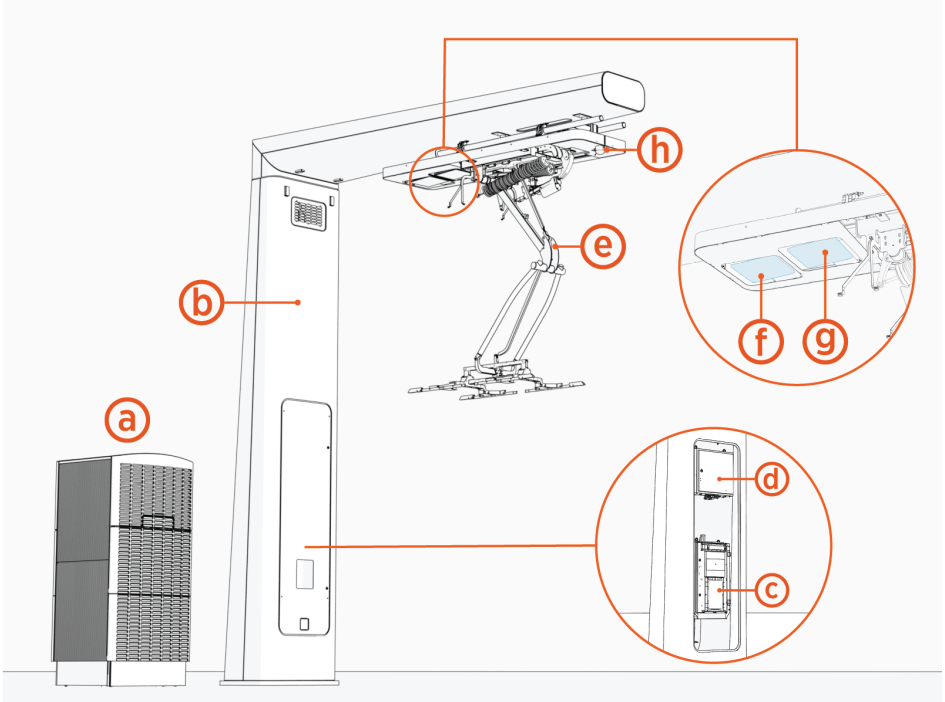

(a) Power Block
(b) Pantograph Down Mast
(c) Power Link 2000
(d) PD Controller
(e) Pantograph
(f) Wi-Fi antenna
(g) RFID antenna
(h) Status LED

Note: The Wi-Fi antenna, RFID antenna, and status LED are collectively referred to as *auxiliary components*.

Document Scope

This guide covers installation of the Pantograph Down 2000 system specifically with the Pantograph Down Mast. It covers installation of the Pantograph Down Mast, the mast-mount Power Link 2000, PD Controller, pantograph, Wi-Fi antenna, RFID antenna, and status LED. For installation of the Power Block, refer to the *Express Plus Power Block Installation Guide*.

For installation of the Pantograph Down 2000 system in overhead configuration, see the *Pantograph Down 2000 Overhead Configuration Installation Guide*.

System Overview

Power Block

Power Block block diagram:

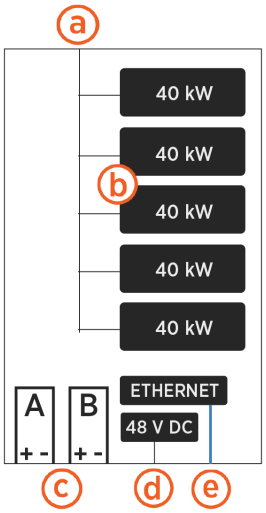

(a) Three phase AC power input

(b) Configurable with up to five 40 kW Power Modules for a maximum total output of 200 kW

(c) Two available HV DC power outputs (A and B)

(d) 48 V DC power output

(e) Ethernet output

The Power Block is a ground-mounted enclosure with the following structure:

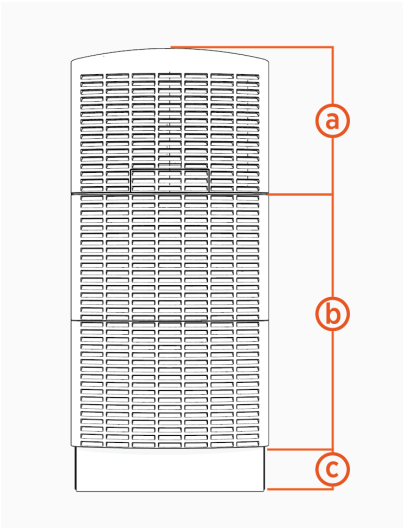

(a) Upper enclosure: Auxiliary power supply and temperature management components

(b) Lower enclosure: Bay for Power Modules and bus bars to land all input and output cables

(c) Pedestal: Secures the Power Block and provides access for either stub-up or surface mount installations on a concrete pad

Power Link 2000

Power Link 2000 block diagram:

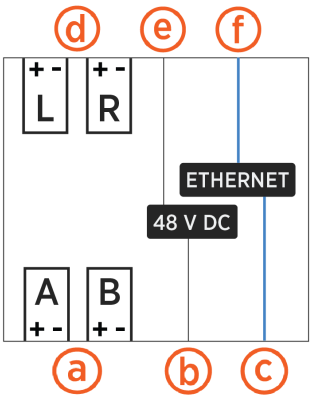

(a) Single or dual HV DC input power paths (A and B)

(b) 48 V DC power input

(c) Ethernet input

(d) Single or dual HV DC outputs (L and R)

(e) 48 V DC power output

(f) Ethernet output

The Power Link 2000 is a vertical enclosure that comes in two primary variants:

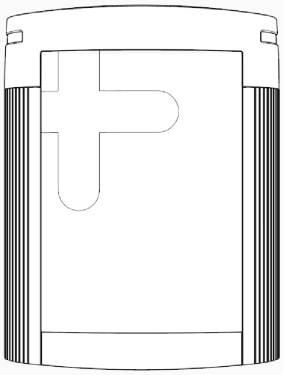

Overhead-mount enclosure:

Designed for gantry, ceiling, or wall mount, this enclosure is clad with external cosmetic covers. The overhead-mount Power Link 2000 is available with single or dual outputs, supporting one pantograph per output. Dual output Power Link 2000s support both simultaneous and sequential charging.

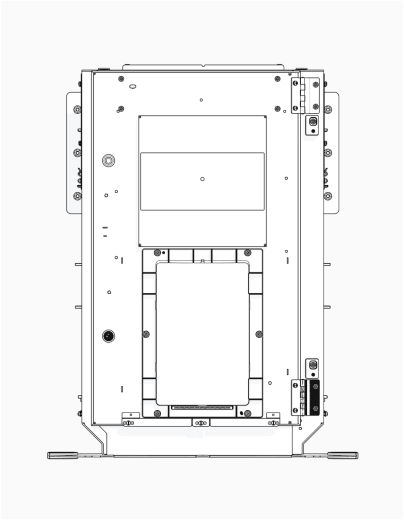

Mast-mount enclosure:

Designed for mount within the Pantograph Down Mast, this enclosure has no cosmetic covers, and supports a single output connection to a pantograph.

Power Block to Power Link 2000 Configuration

The DC output of the Power Block is the DC input of the Power Link 2000. Each Power Block has two HV DC outputs that can be fed to a single Power Link 2000 or to two different Power Link 2000s. A simplified block diagram of a single Power Block connected to two Power Link 2000s is shown below. The Power Block also feeds 48 V DC power and Ethernet connectivity to the Power Link 2000s.

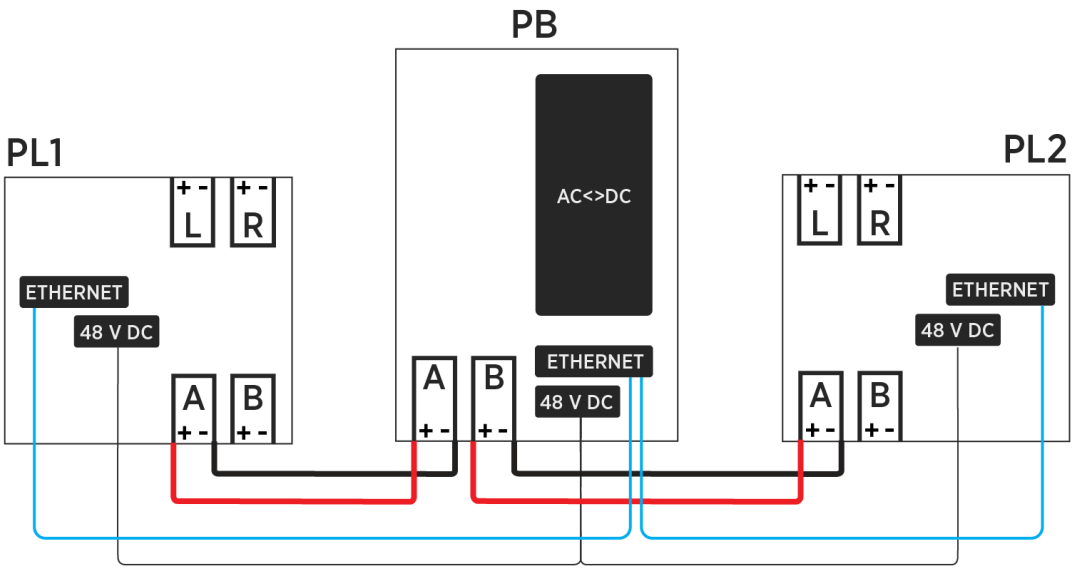

In turn, for Pantograph Down 2000 applications, the Power Link 2000 can accept high voltage DC input from multiple Power Blocks, as shown in the example below.

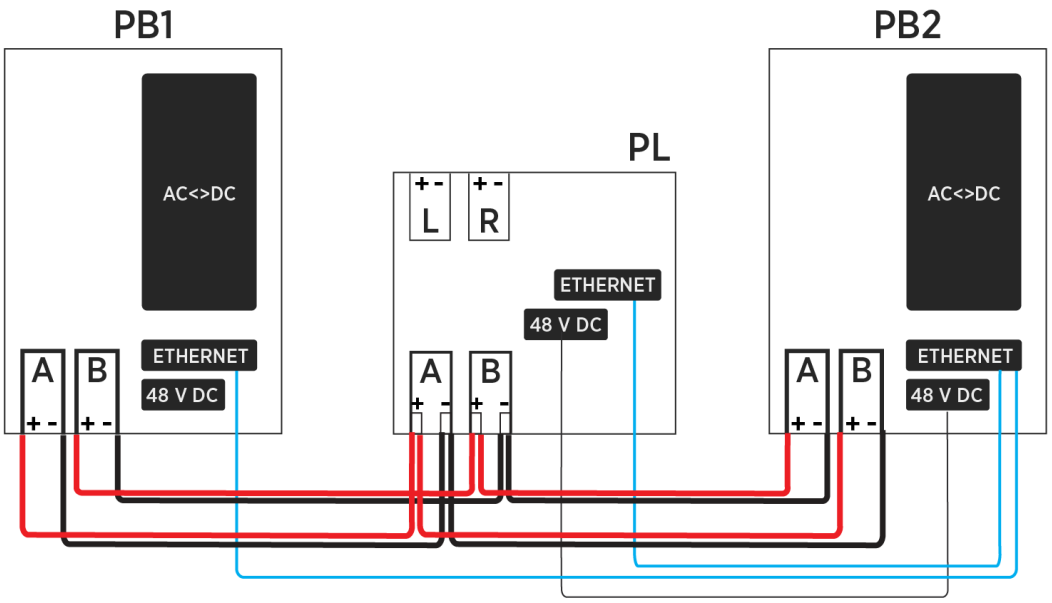

The high voltage DC output, Ethernet, and 48 V DC power output from Power Block(s) can be connected from Power Link 2000 to Power Link 2000, enabling higher port counts in specific sequential charging configurations.

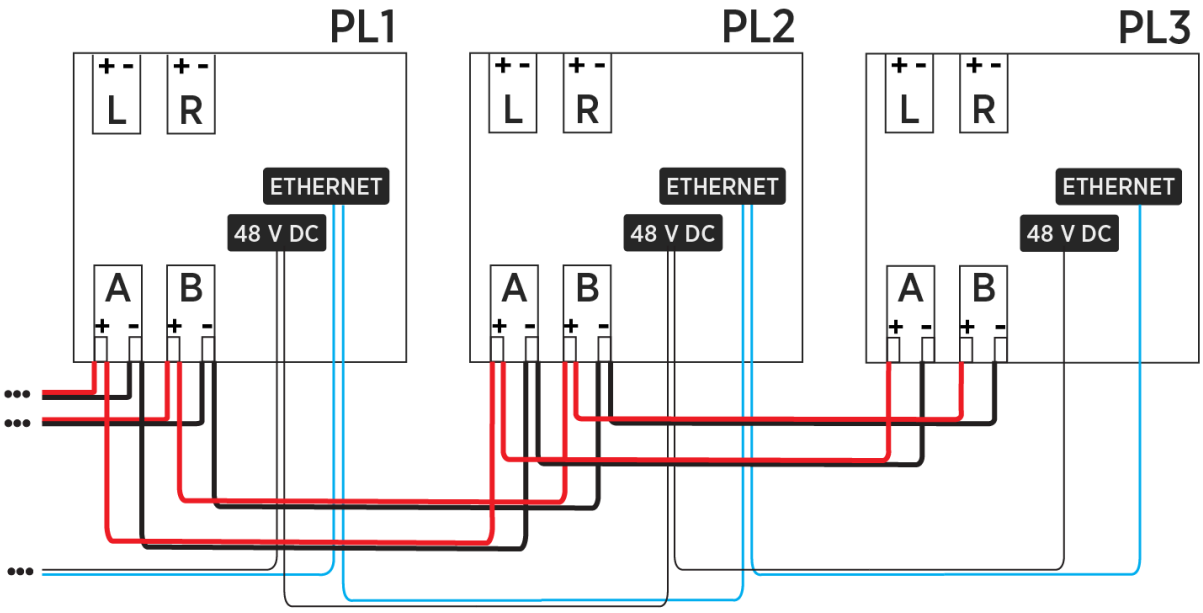

IMPORTANT: The architectures shown above demonstrate only a few of the many supported by Express Plus. The actual architecture for each site will vary depending on the number of stations, the charging capacity required at each charging station, simultaneous or sequential charging requirements, and other criteria. Contact a ChargePoint representative for the ChargePoint -approved wiring architecture for your specific project. Non-approved wiring between Power Blocks and Power Link 2000s may not enable Express Plus to function as expected.

Power Link 2000 to Pantograph Configuration

Each Power Link 2000 HV DC output connects to one pantograph. One PD Controller is required for each pantograph. The PD Controller requires 48 V DC and Ethernet connectivity from the Power Link 2000 as well as single-phase AC power from the site. The PD Controller connects to the status LED, Wi-Fi antenna, and RFID antenna. The PD Controller also connects to the pantograph for control pilot, actuation commands, and other pantograph functions. The block diagram below illustrates the connectivity between a Power Link 2000 and a pantograph/PD Controller pair.

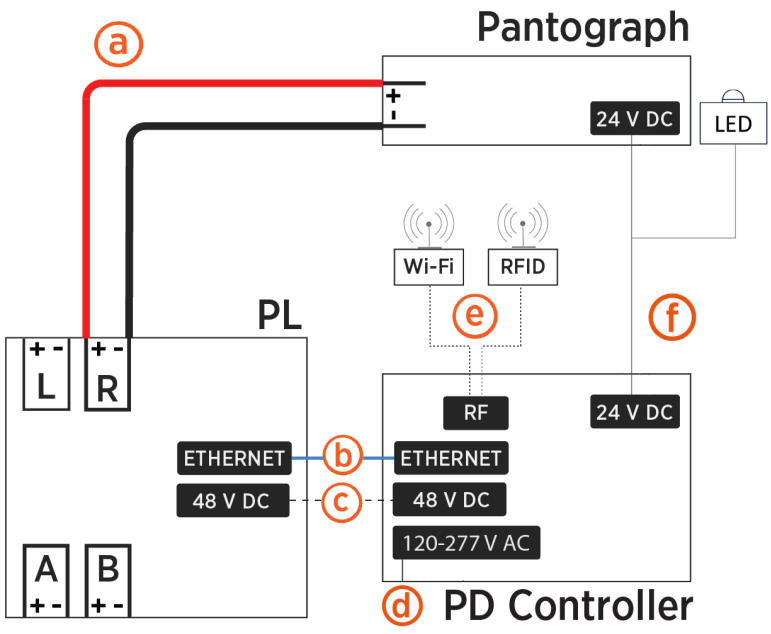

(a) Power Link 2000 HV DC output to pantograph

(b) Ethernet connection between Power Link 2000 and PD Controller

(c) Power Link 2000 48 V DC output to PD Controller

(d) PD Controller 120–277 V AC power input

(e) RF connection from PD Controller to Wi-Fi antenna and RFID antenna

(f) 24 V DC connection from PD Controller to pantograph and status LED

Additional Power Link 2000 Configurations

Ethernet to USB Kit

The Ethernet to USB Kit is an option that can be installed within a single Power Link 2000 within a connected Pantograph Down 2000 cluster. It allows Power Link 2000 to have a hardwired Ethernet connection with an external network server. The installation requires a conduit for the Ethernet cable, which must be run from the customer server or network equipment directly to the Power Link 2000. Only one Ethernet to USB Kit is required per Pantograph Down 2000 cluster. This kit is ordered separately and is field installed.

Soft Shutdown Switch

As an option, the Power Link 2000 can be connected to an external switch for soft shutdown. When the switch is closed, the Power Link 2000 software ends the current charging session with a normal stop, then opens DC contactors in the Power Link 2000. The station stays in this state regardless of station power, not allowing operation. Only a service technician can place the Power Link 2000 back into service after the switch is reset to Open.

A soft shutdown switch is not meant to safely service the Power Link 2000 or take the place of a HV disconnect switch.

Pantographs

Pantograph Down 2000 integrates with the following pantographs:

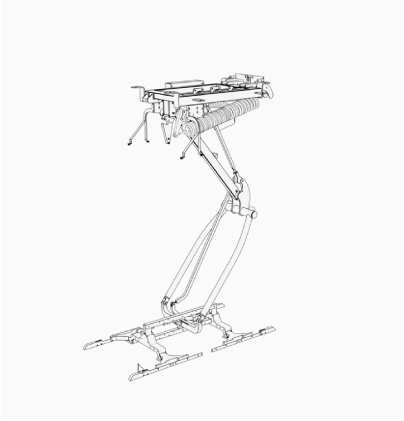

Schunk SLS 201.102 - High power charging, fast actuation pantograph. Suitable for mount from a ceiling, gantry, or mast.

Safety Warning

WARNING: Danger of crushing, pinching, and mechanical damage.

Site Operator Responsibilities:

- Ensure the pantograph is installed in a location free from safety hazards and restrict access to the movement area with appropriate safety measures.
- Inspect the equipment regularly for mechanical damage and address any issues promptly.

Operator and Bystander Safety:

- The pantograph moves quickly and has pinch points.
- To avoid serious injury, keep clear of the moving pantograph and ensure bystanders maintain a safe distance.
- Never reach into the mechanism or touch the moving pantograph.
- No one is allowed underneath the equipment during operation.

FAILURE TO FOLLOW THESE INSTRUCTIONS CAN RESULT IN SERIOUS INJURY, LOSS OF LIFE OR PROPERTY DAMAGE.

Express Plus Guides

Pantograph Down 2000 is a part of the Express Plus product family.

Access ChargePoint documents at chargepoint.com/guides.

Document	Content	Primary Audiences
Datasheet	Full station specifications	Site designer, installer, and station owner
Site Design Guide	Civil, mechanical, and electrical guidelines to scope and construct the site	Site designer or engineer of record
Concrete Mounting Template Guide	Instructions to embed the charging station template in a concrete pad with anchor bolts and conduit placement (these may also be included in the Site Design Guide)	Site construction contractor
Surface Conduit Entry Kit Guide	Instructions for sites where conduit cannot be run underground	Installer
Construction Signoff Form	Checklists used by contractors to ensure the site is correctly completed and ready for product installation	Site construction contractor
Installation Guide	Anchoring, wiring, and powering on	Installer
Operation and Maintenance Guide	Operation and preventive maintenance information	Station owner, facility manager, and technician
Service Guide	Component replacement procedures, including optional components	Service technician
Declaration of Conformity	Statement of conformity with directives	Purchasers and public

Questions

For assistance, navigate to *chargepoint.com/support* and contact technical support using the appropriate region-specific number.

Prepare for Installation 2

Check Site Readiness

To check site readiness, complete this checklist before you install Pantograph Down 2000:

Pantograph Down 2000 Site Readiness Checklist		
1.	The electrical equipment is installed and labeled in accordance with the National Electrical Code (NEC) and all applicable requirements of the serving electric utility company and the authority having jurisdiction.	☐
2.	Power Blocks are installed at locations proposed in the site drawings.	☐
3.	The installation site for the Pantograph Down Mast meets the following requirements: • The concrete foundation was designed and approved by a structural engineer for the Pantograph Down Mast structural specifications given in the *Pantograph Down 2000 Site Design Guide*. • The concrete foundation is fully cured and smooth. • Anchor bolts (x4) are at locations proposed in the site drawings and installed per instructions given in the site plans. • Conduit stub-ups are present per the site plans. • Wires meet the requirements given in the site plans.	☐
4.	The installation site meets the drainage, ventilation guidelines, and clearances given in the *Pantograph Down 2000 Site Design Guide*.	☐
5.	Sufficient space is available to use a forklift or other lifting equipment, unpack, remove packing materials, and allow two people to freely move throughout the site.	☐

Electrical Readiness

Refer to the *Pantograph Down 2000 Datasheet* and *Pantograph Down 2000 Site Design Guide* for electrical input and output specifications. Obtain these documents from your ChargePoint representative.

Bring These Tools and Resources

Pantograph Down 2000 requires at least three people for installing the mast and at least two people for installing all other components.

Additionally, the installer must bring the equipment, tools, and materials specified in this section. These are not provided by ChargePoint.

CAUTION: Comply with these guidelines to prevent component damage.

- Use appropriately sized tools to torque fasteners.
- Use the given torque values to tighten the fasteners.
- Ensure that the tools such as torque tool, multimeter, and Ethernet tester are calibrated.

Equipment for Lifting and Installing Mast

Construction crane

- Rated for ≥ 4536 kg (10,000 lb)

Mobile elevating work platform (scissor lift)

Metal lifting cable sling

- Rated for ≥ 100 kg (220 lb)
- Length 10 ft

Flat eye web lifting sling (x2)

- Rated for ≥ 2900 kg (6400 lb)
- Length 3 m (10 ft)

Equipment for Lifting Enclosures and Pantograph

Forklift with anti-slip forks

- Rated for ≥ 300 kg (661 lb)
- Fork max size:
  - Width = 102–127 mm (4–5 in)
  - Thickness ≤ 57 mm (2.25 in)
- If your site has height constraints or heights that exceed the service range of a forklift, use alternative equipment

Equipment and Tools for Installation

Paper towel roll

Industrial vacuum cleaner

Hard hat

Safety glasses

Cable ties

Cable puller or fish tape

Level

Multimeter (meter and probes rated for 1000 V)

Conduit cutter (to cut up to 4 in conduits)

Wire cutters, including Ethernet (Cat6 Shielded Twisted Pair (STP)) cable

Lug crimping tool and die

Torque wrench

Magnet tray

Wire brush (to remove any residue on anchor bolts)

Cut-resistant gloves

Ladder

Box cutter

Measuring tape or other tool to measure height, length, and distance

Lockout/tagout equipment

Ethernet tester such as a Klein Tools VDV526-052 VDV LAN Scout Jr. Tester or similar

Pliers

Wire strippers, including Ethernet (Cat6 STP) cable

Ethernet (RJ45) connector crimping tool

Torque screwdriver

Hex socket set (including 8 mm, 10 mm, 13 mm, 17 mm, 24 mm deep socket, 1/2 in, 9/16 in, 3/4 in, 7/16 in, 7/8 in, 15/16 in, 2-3/8 in, 3-1/2 in)

Wrench set (including 3/4 in, 5/16 in, 13/16 in, 20 mm, 33 mm, 46 mm, and adjustable)
3-1/2 in strike wrench

T25 Security screwdriver

Phillips head screwdriver set (including #2)

Permanent marker

Weatherproof sealant

Hydraulic hole punch

Hand-held drill

Smartphone with internet connectivity

ChargePointInstaller app

Hex wrench (10 mm, 5/32 in, 3/16 in, 7/32 in, 7/16 in)

Torx screwdriver (T20, T25, T30)

Flathead screwdriver set (including 2.5 mm and 3.5 mm tip for terminal blocks)

Torque paint pen

Anti-oxidant joint compound (to make gastight joint between wire and lug) and wire pulling lubricant

Dielectric grease

Rubber mallet

Drill bit (3/8 in)

QR code scanner (usually built into the camera app)

ChargePoint installer login credentials

Additional Consumables

The installer must provide the following parts. These parts are not provided by ChargePoint.

- A 3-1/2 inch strut pipe strap (x1 per Pantograph Down Mast)
- A water-tight cable gland for the ground wire that exits the Power Link 2000 bottom gland plate and connects to the Pantograph Down Mast (x1 per Power Link 2000)

Wires and Terminations Required for Site

The installer must bring all wires and lugs specified in this section. They are not provided by ChargePoint.

IMPORTANT:

- For AC and DC high voltage (HV), high current wiring, use copper or aluminum wires rated for 90 °C (194 °F).
    - AC high current wires can be THHN/THHW/THW-2/THWN-2 based on site condition (dry or wet) and rated for 600 V.
    - DC HV wires can be XHHW/XHHW-2 based on site condition (dry or wet) and rated for 1000 V.
- For low voltage (LV) DC wiring, use only copper wires (XHHW/XHHW-2 based on site condition, dry or wet) rated for 1000 V and 75 °C (167 °F).
- For PD Controller 120–277 V AC input wires, use only copper wires rated for 600 V AC and 75 °C (167 °F).
- Use copper lugs for copper wires and aluminum lugs for aluminum wires. The lugs must be nickel, tin, or silver plated compression (not mechanical) lugs. Nickel-plated lugs installed with dielectric grease is recommended.

Mast-mount Power Link 2000 input wires

The Power Block DC (HV and LV) and Ethernet outputs are the inputs for the Power Link 2000. In some Express Plus architectures, the Power Link 2000 may receive DC (HV and LV) power from Power Block(s) via a connection to another Power Link 2000. The Power Link 2000 may also be configured with LV DC connection with a soft shutdown switch and/or a hardwired Ethernet connection to a network server.

IMPORTANT: Following are wire specifications for the Power Link 2000, including the maximum quantity and size that the wire terminals can accommodate. All sizing assumes a maximum ambient temperature of 50 °C (122 °F). Where the maximum wire size is listed, the actual wire quantity and size must be chosen based on site-specific wiring requirements and in accordance with the maximum allowed conduit filling rate per local code.

Input Wire	Quantity	Size	Termination
HV DC (Max. 500 A per landing)	Max. 12 wires (three per pole on each landing)	Upper landings: Max. 150 mm^2 (300 MCM)*	Lug: Long barrel and tongue with two holes spaced 44.5 mm (1.75 in) apart and sized for M12 (0.5 in) studs. Max. tongue width: 31 mm (1.25 in) for upper landings, 25.9 mm (1 in) for lower landings. Aluminum lug max. tongue thickness: 10 mm (0.4 in) for upper landings, 5 mm (0.2 in) for lower landings.
		Lower landings: Max. 120 mm^2 (4/0 AWG)	
Ground (from Power Block)	Max. 3 wires (one from each Power Block)	Refer to local code for size; Max. 50 mm^2 (1/0 AWG)	Lug: Short barrel and tongue with single hole and sized for M6 (0.25 in) stud.
LV DC (from Power Block or another Power Link 2000)	Max. 4 wires (two wire pairs; each pair has one wire per pole)	16 mm^2 (6 AWG)	Stripped wire end
Ethernet	Max. 4 cables	Cat6 STP cable, outdoor rated or Paige OSP Shielded Gamechanger**	RJ45 connector
Soft shutdown switch***	2 wires	2.5 mm^2 (14 AWG)	Stripped wire end

*__Note:__ If utilizing both upper and lower landings, the maximum HV DC wire size is 120 mm^2 (4/0 AWG).

**__Note:__ The required Ethernet cable type depends upon the cable run length. See the *Pantograph Down 2000 Site Design Guide* for details.

***__Note:__ Soft shutdown switch is an optional feature.

Mast-mount Power Link 2000 output wires

The mast-mount Power Link 2000 provides HV DC output to one pantograph and provides LV DC and Ethernet output to the PD Controller. In some Express Plus architectures, the Power Link 2000 may provide DC (HV and LV) power from Power Block(s) to other Power Link 2000(s).

IMPORTANT: Following are wire specifications for the Power Link 2000, including the maximum quantity and size that the wire terminals can accommodate. All sizing assumes a maximum ambient temperature of 50 °C (122 °F). Where the maximum wire size is listed, the actual wire quantity and size must be chosen based on site-specific wiring requirements and in accordance with the maximum allowed conduit filling rate per local code.

Output Wire	Quantity	Size	Termination
HV DC*	6 wires (three per pole)	120 mm^2 (4/0 AWG)	Lug**: Long barrel and tongue with two holes spaced 44.5 mm (1.75 in) apart and sized for M12 (0.5 in) studs. Max. tongue width: 31 mm (1.25 in). Aluminum lug max. tongue thickness: 5 mm (0.2 in).
High power ground* (to pantograph PE)	1 wire	50 mm^2 (1/0 AWG)	Lug: Short barrel and tongue with single hole sized for M6 (0.25 in) stud.
Ground (to Pantograph Down Mast)	1 wire	Refer to local code for size; Max. 50 mm^2 (1/0 AWG)	Lug: Short barrel and tongue with single hole sized for M6 (0.25 in) stud.
LV DC (to another Power Link 2000)	Max. 4 wires (two wire pairs; each pair has one wire per pole)	16 mm^2 (6 AWG)	Stripped wire end
LV DC (to PD Controller)	This wire pair is provided with the mast-mount Power Link 2000. The wire ships pre-terminated for connection within the Power Link 2000.		
Chassis ground (to PD Controller)	1 wire	4 mm^2 (12 AWG)	Ring terminal: Sized for M6 (0.25 in) stud.
Ethernet	1 cable	Cat6 STP cable, outdoor rated	RJ45 connector, shielded

*__Note:__ The output HV DC and high power ground wires and conduit are provided with the Pantograph Down Mast.
**__Note:__ Provided HV DC wires are DLO copper wire, requiring flex lugs.

PD Controller Wires

Each PD Controller is configured with AC input from the site as well a LV DC, chassis ground, and Ethernet connection from a Power Link 2000. Allowed quantity, size, and terminations for these wires are listed below. Check the site plan for site specific wire specifications.

IMPORTANT: Following are wire specifications for the PD Controller, including the maximum quantity and size that the wire terminals can accommodate. All sizing assumes a maximum ambient temperature of 50 °C (122 °F). Where the maximum wire size is listed, the actual wire quantity and size must be chosen based on site-specific wiring requirements and in accordance with the maximum allowed conduit filling rate per local code.

Wire	Quantity	Size	Termination
120-277 V AC input	2 wires (one per pole)	Size based on branch circuit breaker; Max. 16 mm^2 (6 AWG)	Stripped wire end
AC ground	1 wire	Size based on branch circuit breaker; Max. 16 mm^2 (6 AWG)	Stripped wire end
LV DC input	LV DC input wires are provided by ChargePoint for installing the PD Controller with the Pantograph Down Mast.		
Ethernet input	See Power Link 2000 output wire specifications.		RJ45 connector, unshielded
Chassis ground	See Power Link 2000 output wire specifications.		Stripped wire end

Schunk SLS 201.102 pantograph wires

The Schunk SLS 201.102 pantograph is configured with HV DC input and high power ground connection from a Power Link 2000. It also has a ground connection from the Pantograph Down Mast. Allowed quantity, size, and terminations for these wires are listed below. Check the site plan for site specific wire specifications.

IMPORTANT: Following are wire specifications for the pantograph, including the maximum quantity and size that the wire terminals can accommodate. All sizing assumes a maximum ambient temperature of 50 °C (122 °F). Where the maximum wire size is listed, the actual wire quantity and size must be chosen based on site-specific wiring requirements and in accordance with the maximum allowed conduit filling rate per local code.

Wire	Max. Wire Quantity and Size	Termination
HV DC (from Power Link 2000)	See Power Link 2000 output wire specifications.	Lug: Single hole lug and sized for M10 bolt.
High power ground (PE) (from Power Link 2000)	See Power Link 2000 output wire specifications.	Lug: Single hole lug and sized for M10 bolt.
Ground (from Pantograph Down Mast)	See Pantograph Down Mast wire specifications.	Ring terminal: Sized for M8 bolt.

Pantograph Down Mast wires

The Pantograph Down Mast is configured with a ground connection from the Power Link 2000. Depending on site requirements, it may also be connected to a maximum of two grounding rods. Allowed quantity, size, and terminations for these wires are listed below. Check the site plan for site specific wire specifications.

IMPORTANT: Following are wire specifications for the pantograph, including the maximum quantity and size that the wire terminals can accommodate. All sizing assumes a maximum ambient temperature of 50 °C (122 °F). Where the maximum wire size is listed, the actual wire quantity and size must be chosen based on site-specific wiring requirements and in accordance with the maximum allowed conduit filling rate per local code.

Wire	Quantity	Size	Termination
Ground (from grounding rods)	Max. 2 wires	Refer to local code for size; Max. 50 mm^2 (1/0 AWG)	Lug: Single hole and sized for 3/8 in bolt.
Ground (from Power Link 2000)	1 wire	See Power Link 2000 output wire specifications.	Lug: Single hole and sized for 3/8 in bolt.
Ground (to pantograph frame)	1 wire	Refer to local code for size; Max. 50 mm^2 (1/0 AWG)	Ring terminal: Sized for M8 bolt.

Tightening Torques

Power Link 2000

Component	Component Material	Fastener	Tool	Torque
Soft shutdown switch set screws	-	-	2.5 mm flathead screwdriver	**0.6 Nm (5.3 in-lb)**
LV DC terminal set screws (for output to PD Controller)	-	-	3.5 mm flathead screwdriver	**0.7 Nm (6.2 in-lb)**
LV DC terminal set screws (for output to Power Block or other Power Link 2000)	-	-	3.5 mm flathead screwdriver	**1.5 Nm (13.3 in-lb)**
Gland plate screws	Metal	M5	T25 Security	**4.5 Nm (40 in-lb)**
Ethernet to USB mounting nuts			8 mm socket	
Enclosure mounting screws	Metal	M6	T30 Torx	**5.6 Nm (50 in-lb)**
Ground wire lug nuts			10 mm socket	
Chassis ground wire nuts				
HV DC wire lug nuts	Metal	M10	17 mm socket	**19 Nm (14 ft-lb)**
Mounting base fasteners	Metal	1/2 in	3/4 in socket	**50 Nm (37 ft-lb)**

PD Controller

Component	Component Material	Fastener	Tool	Torque
Wi-Fi coaxial cable connector	-	-	5/16 in wrench	**0.45 Nm (4 in-lb)**
RFID coaxial cable connector	-	-		
AC PE terminal set screw	-	-	3.5 mm flathead screwdriver	**1.7 Nm (15 in-lb)**
AC circuit breaker set screws (18-12 AWG wires)	-	-	#2 Phillips screwdriver	**2.4 Nm (21.2 in-lb)**
AC circuit breaker set screws (10-8 AWG wires)	-	-		**2.8 Nm (24.8 in-lb)**
AC circuit breaker set screws (6 AWG wires)	-	-		**4 Nm (35.4 in-lb)**
3/4 in NPT cable gland cap	-	-	33 mm wrench	**4.5 Nm (40 in-lb)**
1-1/4 in NPT cable gland cap	-	-	46 mm wrench	
3/4 in NPT cable gland nut	-	-	33 mm wrench	**7.9 Nm (70 in-lb)**
1-1/4 in NPT cable gland nut	-	-	46 mm wrench	**10.2 Nm (90 in-lb)**
Enclosure mounting bolts	Metal	5/16 in	1/2 in socket	**10 Nm (90 in-lb)**
Unistrut mounting fasteners	Metal	1/2 in	3/4 in socket	**50 Nm (37 ft-lb)**

Auxiliary Components

Component	Component Material	Fastener	Tool	Torque
Wi-Fi antenna coaxial cable connector	-	-	13/16 hex wrench	**1.5 Nm (13.3 in-lb)**
RFID antenna coaxial cable connector	-	-		
Status LED mounting nuts	Metal	M5	8 mm socket	**4.5 Nm (40 in-lb)**
Auxiliary component frame, side cover nuts (at cover ends)	Metal			
Auxiliary component frame, front cover	Metal	M6	10 mm socket	**5.6 Nm (50 in-lb)**
Wi-Fi and RFID antenna assembly mounting nuts	Metal			
Auxiliary component frame, ground wire fasteners	Metal			
Auxiliary component frame, rear cover	Metal			
Auxiliary component frame, side cover nuts (along cover length)	Metal			
Auxiliary component frame, side rail mounting nuts	Metal	M16	24 mm deep socket	**94.9 Nm (70 ft-lb)**

Schunk SLS 201.102 Pantograph

Component	Component Material	Fastener	Tool	Torque
Pantograph mounting rail clamp screw	-	-	7/16 in	**4.7 Nm (42 in-lb)**
Control pilot cable gland	-	-	20 mm wrench	**1.5 Nm (13.3 in-lb)**
Pantograph frame ground wire fasteners	Metal	M8	13 mm socket	**12.2 Nm (108 in-lb)**
HV DC wire fasteners	Metal	M10	13 mm and 17 mm socket	**19 Nm (14 ft-lb)**
Pantograph mounting fasteners	Metal	5/8 in	15/16 in socket	**99 Nm (73 ft-lb)**

Pantograph Down Mast

Component	Component Material	Fastener	Tool	Torque
Mast covers and panels screws (for pantograph access cover, hinge access cover, mast arm endcap, and vent panels)	Metal	3/8 in	7/32 in hex	**5.6 Nm (50 in-lb)**
Mesh screen screws	Metal	M6	T25 Torx and 10 mm socket	**5.6 Nm (50 in-lb)**
Ground wire (inside of mast arm) fasteners	Metal	M8	13 mm socket	**15 Nm (133 in-lb)**
Ground bar base fasteners	Metal	3/8 in	9/16 in socket	**19 Nm (14 ft-lb)**
Ground bar wire fasteners				
Mast arm fasteners	Metal	1-1/2 in	2-3/8 in socket	Turn of Nut Technique
Mast mounting nuts	Metal	2-1/4 in	3-1/2 in strike wrench	

Pantograph Down 2000 Packages

WARNING: Component crates are heavy and can cause injury or death if dropped. Do not stand or walk beneath the crate while it is being lifted. Take precautions against the crate tipping or sliding.

IMPORTANT: Leave components in the shipping crate until needed. When removing, protect them from damage (such as scratches) by placing them flat on a blanket or tarp, face up. Do not stand up cover panels, as they may be knocked or blown over. Cover charging connectors to prevent damage or ingress.

IMPORTANT: Keep components out of direct sunlight in a cool area until you install them.

CAUTION: Always transport and store components in their original packaging. Use appropriate lifting equipment (forklift or crane, lifting straps, and any corresponding attachments and accessories). Ensure the load rating of all lifting equipment is adequate for the weight of the crated components.

CAUTION: Keep components in original packaging, free of moisture, and protected from damage until you install or service them at the site. Store all shipments of components in a dry covered location and protect from moisture.

Note: For any missing component, contact ChargePoint support.

Package Dimensions and Weights

Package	Dimensions (LxWxH)	Max. Weight
Pantograph Down Mast	Varies. The mast arrives on a flat bed truck.	3175 kg (7000 lb)
Mast installation parts crate	0.9 x 0.68 x 0.47 m (35.5 x 27 x 18.5 in)	113 kg (250 lb)
Mast panels and covers crate	0.86 x 0.74 x 0.55 m (34 x 29.3 x 21.5 in)	113 kg (250 lb)
Mast Components Kit	Not available	Not available
Power Link 2000	1.52 x 1.14 x 0.51 m (60 x 45 x 20 in)	182 kg (400 lb)
PD Controller	0.8 x 0.79 x 0.33 m (31.5 x 31 x 13 in)	37 kg (81 lb)
Schunk SLS 201.102	2.44 x 1.22 x 1.22 m (96 x 48 x 48 in)	340 kg (750 lb)
Schunk SLS 201.102 Auxiliary Components Kit	2.71 x 0.93 x 0.34 m (106.8 x 36.3 x 13.3 in)	75 kg (165 lb)
Ethernet to USB Kit (option)	0.3 x 0.39 x 0.22 m (11.81 x 15.35 x 8.66 in)	1.4 kg (3 lbs)

Pantograph Down Mast

The Pantograph Down Mast ships to site on a flatbed truck, along with two parts crates.

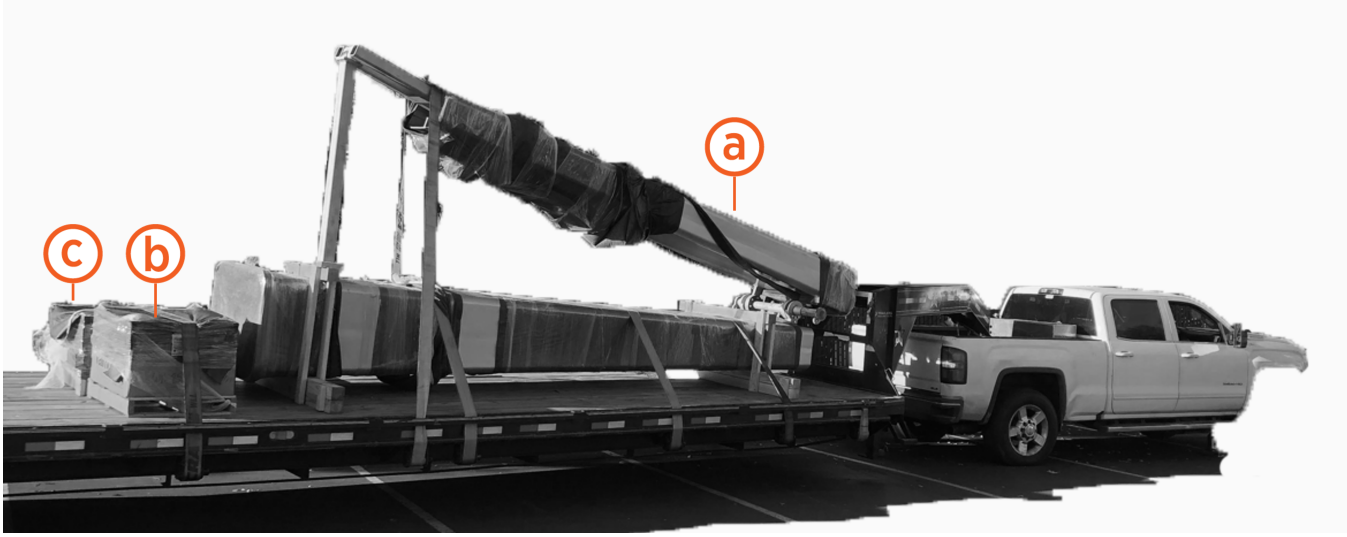

(a) Mast

(b) Installation parts crate

(c) Panels and covers crate

Installation Parts Crate

Note: Images are not exact to scale.

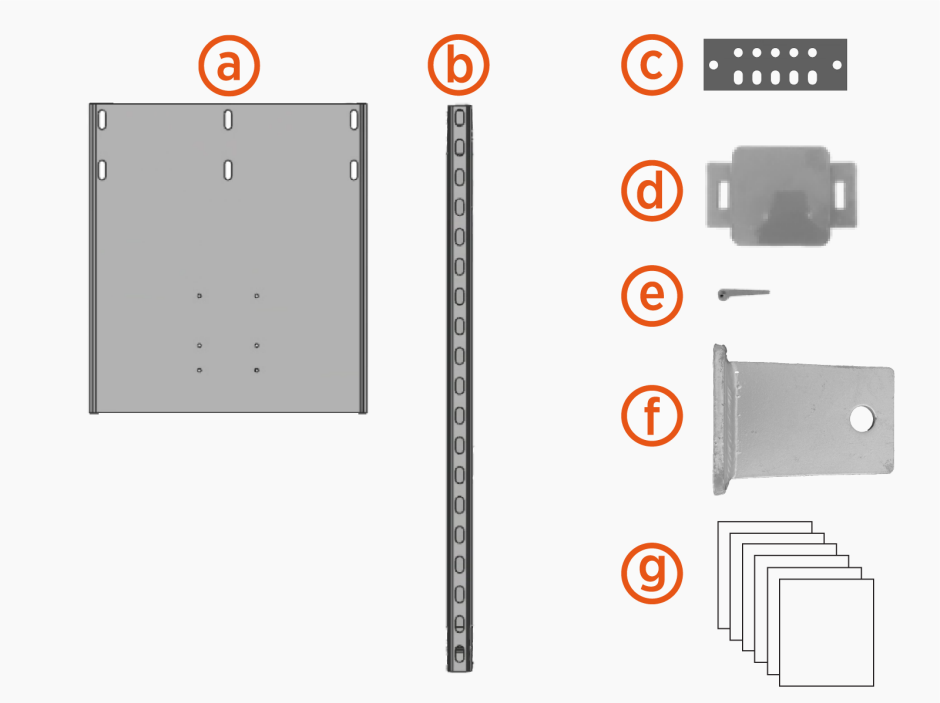

(a) Power Link 2000 mounting bas

(b) PD Controller mounting unistruts (x2)

(c) Mast ground bar

(d) Knockout cover

(e) Knockout cover wedge pins (x2)

(f) Pivot hinge plugs (x2)

(g) Bags with fasteners and hardware:

- Fasteners for securing mast arm to pole: 1-1/2 x 8 in bolts (x10), 1-1/2 in washers (x20), 1-1/2 in nuts (x10)
- Fasteners for securing Power Link 2000 mounting base: 1/2 in bolts (x6), 1/2 in washer (x6), 1/2 in nuts (x6)
- Fasteners for securing Power Link 2000 to mounting base: M6 x 25 mm screws (x8)
- Fasteners for securing PD Controller mounting unistruts: 1/2 in bolts (x4), 1/2 in washers (x4), 1/2 in nuts (x4)
- Fasteners for securing PD Controller to unistruts: 5/16 x 1-1/4 in bolts (x4), 5/16 in washers (x4), 5/16 in spring nuts (x4)
- Fasteners for securing Schunk SLS 201.102 pantograph on mast: 5/8 x 2 in bolt (x4). 5/8 in flat washer (x4), 5/8 in lock washer (x4), 5/8 in hex nut (x4)
- Fasteners for securing mast ground bar: 3/8 x 1-1/4 in bolts (x2), 3/8 in flat washers (x4), 3/8 in dragon tooth washers (x4), 3/8 in lock washers (x2), 3/8 in hex nuts (x2)
- Fasteners for securing mast covers and panels: 3/8 x 1-1/4 in button head screws (x16)
- Lanyards (x3) with caribiner clips attached at each end

Panels and Covers Crate

Note: Images are not exact to scale.

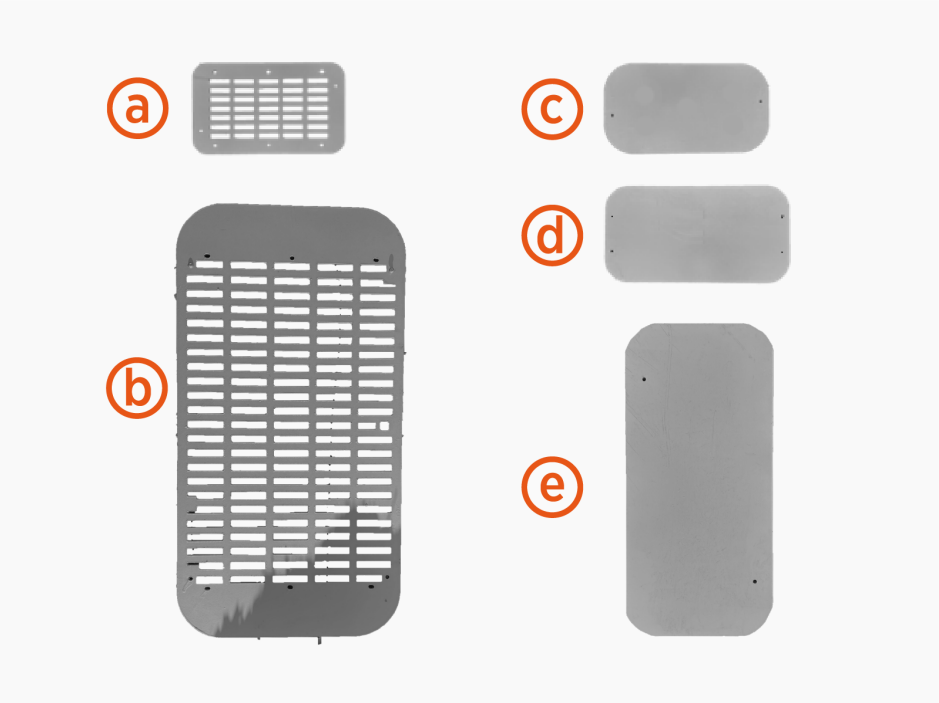

(a) Upper vent panels (x2)
(b) Lower rear vent panel
(c) Hinge top access cover
(d) Arm end cap
(e) Pantograph top access cover

Mast Components Kit

- Controller interface cable (13 m, 42.7 ft)
- Wi-Fi antenna coaxial cable (13 m, 42.7 ft)
- RFID antenna coaxial cable (13 m, 42.7 ft)
- Power Link 2000 to PD Controller LV DC wire assembly
- Door window cover
- Mesh screen, large
- Mesh screens, small (x2)
- Bags with fasteners:
    - Fasteners for securing door window cover: M4 screws and M4 oversized washers (x10 each)
    - Fasteners for securing mesh screens to covers: M6 screws and M6 nuts (x18 each)
    - Fasteners for landing ground wire at pantograph frame: M8 bolt and M8 flange nut (x1 each)
    - Fasteners for landing ground wires at mast ground bar: 3/8 in flange bolts, 3/8 in flange nuts, and 3/8 in external tooth washers (x5 each)
- Cable ties (x2)

Power Link 2000 Package

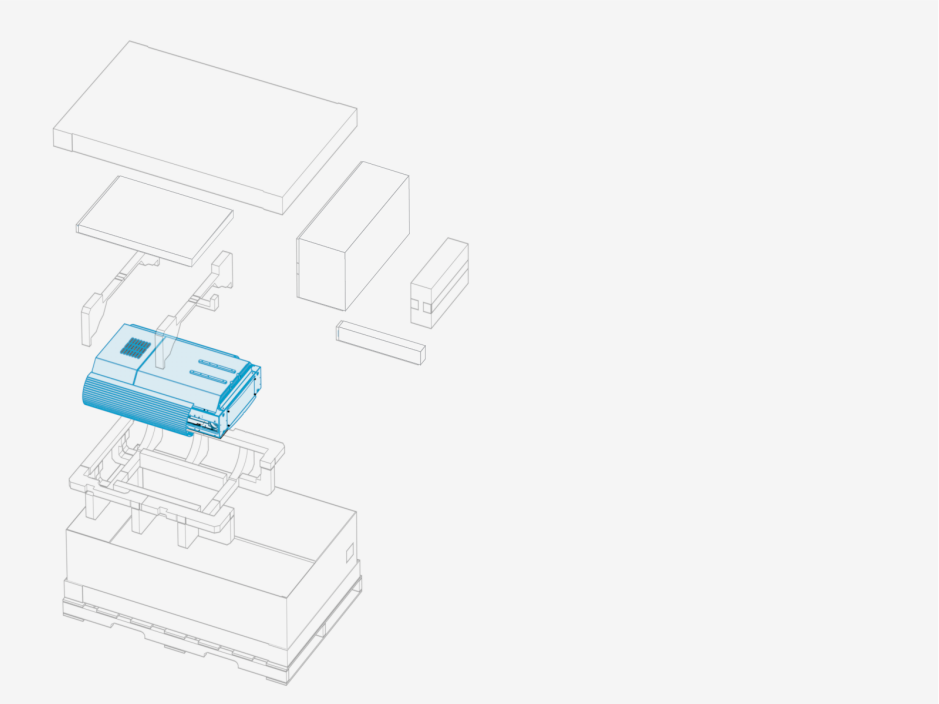

PD Controller Package

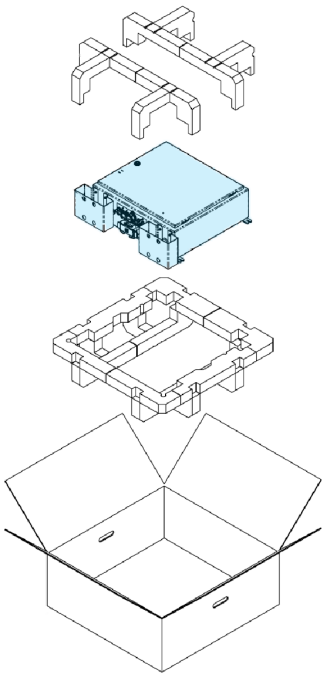

Schunk SLS 201.102 Package

The pantograph ships crated and secured on a pallet.

Schunk SLS 201.102 Auxiliary Components Kit

The Auxiliary Components Kit package ships on a pallet.

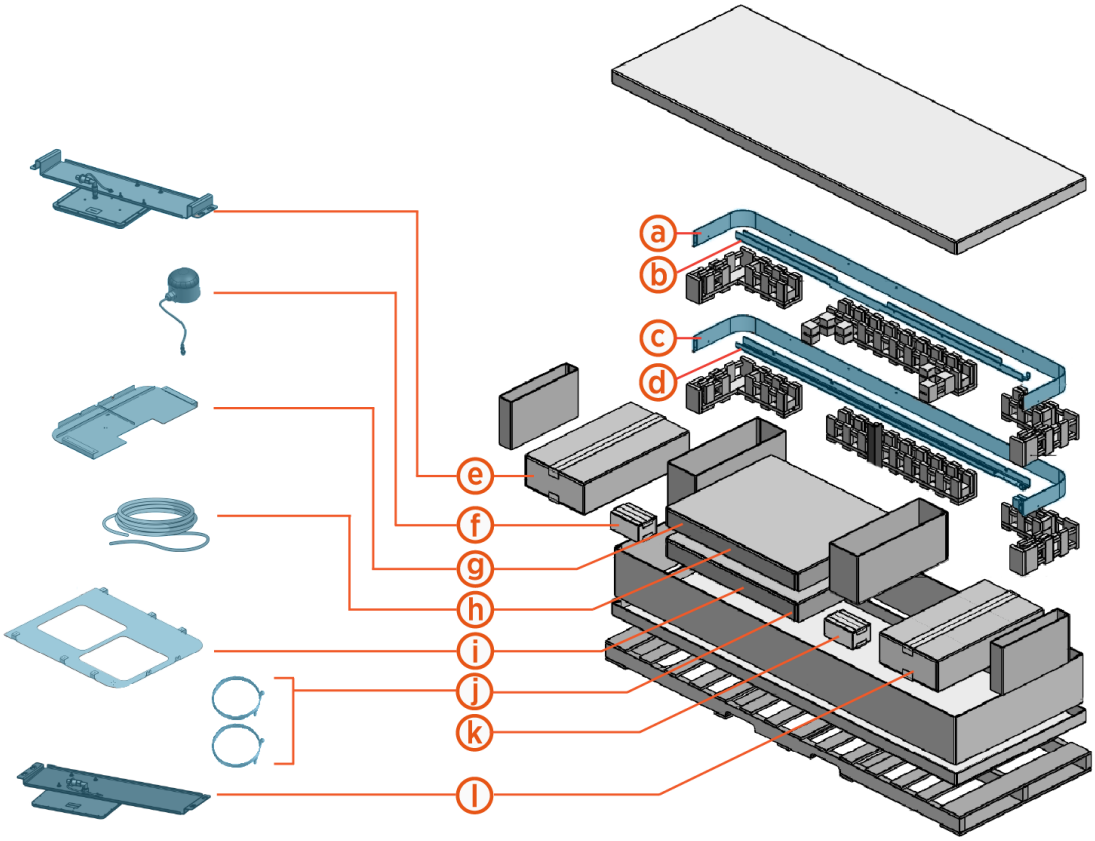

- **(a)** Mounting frame side cover, right
- **(b)** Mounting frame rail, right
- **(c)** Mounting frame side cover, left
- **(d)** Mounting frame rail, left
- **(e)** RFID antenna assembly
- **(f)** Status LED and cable
- **(g)** Mounting frame cover, front
- **(h)** Controller interface cable (5 m, 16.4 ft)
- **(i)** Mounting frame cover, rear
- **(j)** Wi-Fi and RFID antenna coaxial cables (x2) (5m, 16.4 ft each)
- **(k)** Hardware box with:
  - Ground wire (0.5 m, 1.6 ft)
  - M8 bolt and M8 nut (x1 each)
  - M10 bolts and M10 flange nuts (x5 each)
  - M16 bolts and M16 nuts (x4 each)
  - Wire terminal operating tool
  - Cable ties (x9)
- **(l)** Wi-Fi antenna assembly

Disconnect Power

To disconnect power, complete the following steps:

DANGER: RISK OF SHOCK

- Before any procedure, disconnect the power.
- Follow local code and site lockout/tagout procedure to de-energize the station.
- Wait for energy to dissipate (approximately five minutes).
- Keep power off until all covers and panels are reinstalled and the work is complete.

FAILURE TO FOLLOW THESE INSTRUCTIONS CAN RESULT IN SERIOUS INJURY, LOSS OF LIFE, OR PROPERTY DAMAGE.

1. Disconnect power at the site electrical panel.

   Note: Follow standard practice and local code to de-energize the applicable circuit and lock out/tag out the disconnect before proceeding.

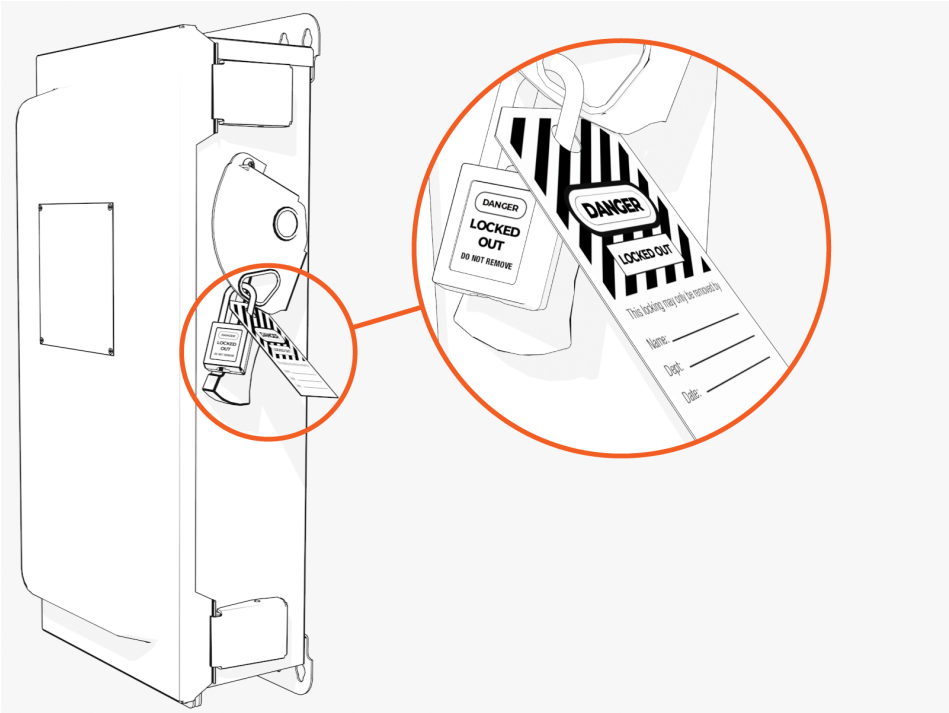

2. Use a multimeter to test that the unit is de-energized.

Mount Mast 3

WARNING: Do not install or service the charging station in inclement weather. If you work in snow, rain, or wind, you must use a weather-proof shelter that covers all boxes and components.

IMPORTANT: If the site has height constraints for installation, contact ChargePoint to get instructions and clearances that you will need for the modified process.

Alternatively, you may use a forklift bracket kit, or a crane with lifting shackles and a spreader bar (constraints may differ among sites).

IMPORTANT: Ensure that the installation complies with all applicable codes and ordinances.

IMPORTANT: Keep components out of direct sunlight in a cool area until you install them.

CAUTION: Warranty Limitation

- If the charging station is not installed, commissioned, or serviced by a ChargePoint certified technician using a ChargePoint-approved method, it is *excluded* from all ChargePoint and other warranties and ChargePoint is not responsible.
- You must be a licensed electrician and complete training at chargepoint.com/installers to become ChargePoint certified and to access ChargePoint's web-based installer tools or ChargePoint Installer app.

CAUTION: Use low torque settings when working with power tools during installation or servicing. Over-torquing can damage the equipment.

CAUTION: While installing fasteners inside the Pantograph Down 2000 components, make sure not to drop the fasteners inside conduit openings. You may use conduit caps or covers to temporarily cover the conduit openings.

Parts Needed

To prepare for mast install, find the following parts:

- Parts from the Mast Installation Parts Crate:
  - 1-1/2 in bolt (x10), 1-1/2 in washer (x20), 1-1/2 in nut (x10)
  - Mast ground bar
  - 3/8 in bolt (x2), flat washer (x4), dragon tooth washer (x4), lock washer (x2), nut (x2)
  - Knockout cover
  - Knockout cover wedge pins
- Parts from the Mast Components Kit:
  - Controller interface cable (13 m, 42.7 ft)
  - Wi-Fi antenna coaxial cable (13 m, 42.7 ft)
  - RFID antenna coaxial cable (13 m, 42.7 ft)

Install Leveling Nuts

1. Locate the four embedded anchor bolts for the Pantograph Down Mast. If necessary clean the bolts and concrete surface with a vacuum cleaner and brush.
2. Install a 2-1/4 inch hex nut followed by a 2-1/4 inch washer onto each anchor bolt, leaving 13 - 25 mm (0.5 - 1.0 in) clearance between the foundation surface and the nut bottom.

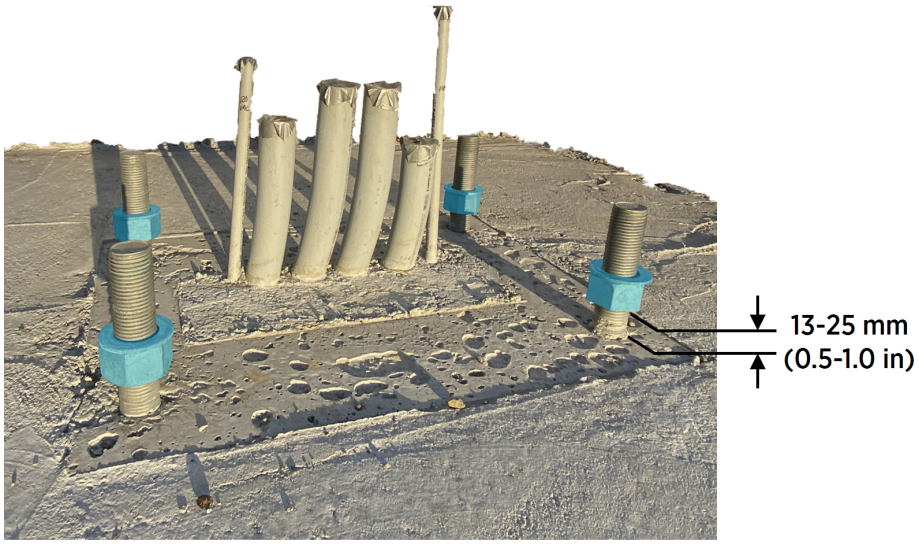

3. Level the nuts in all directions.

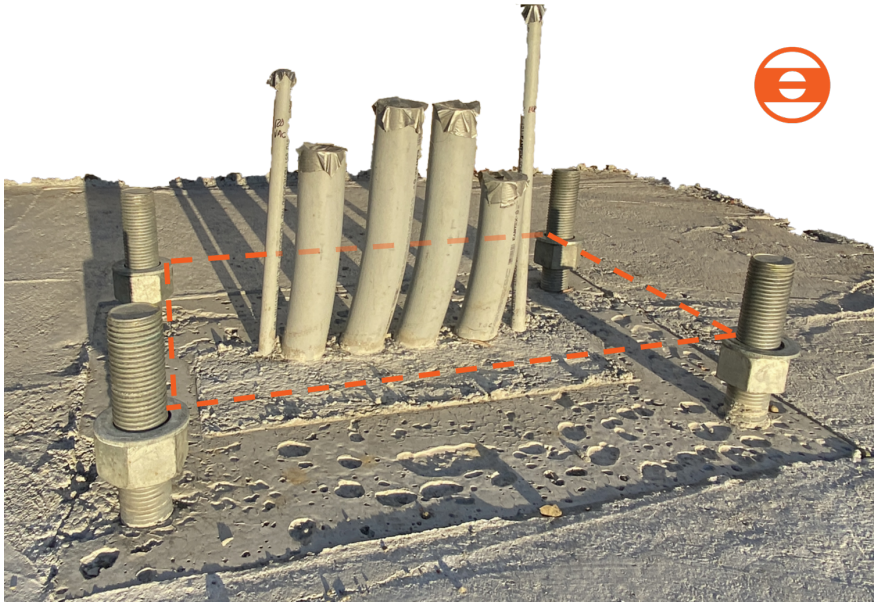

Mount Mast

1. Remove shipping straps securing the mast. Remove protective wrapping from the pole of the mast.

   Note: Leave the protective wrapping around the arm of the mast.

2. Locate the hoisting bar on the mast. Fit the crane with a lifting sling and secure the sling straps onto the hoist bar.

3. Gradually lift and position the mast over and above the anchor bolts.

4. Align the mast anchor bolt holes (x4) with the anchor bolts, and slowly lower the mast pole to rest on the leveling nuts.

5. Install 2-1/4 inch washer and nut onto each anchor bolt (x4). Tighten to snug tight condition with a 3-1/2 inch socket.

6. Ensure the mast is level. Adjust leveling nuts if required.

7. Apply Turn of Nut technique to torque anchor bolt top nuts (x4). Use 3-1/2 inch strike wrench.

> **CAUTION:** Be careful not to damage the high voltage (HV) DC wires present within the mast. If necessary, pull the wires out through the front access or lower rear vent opening.

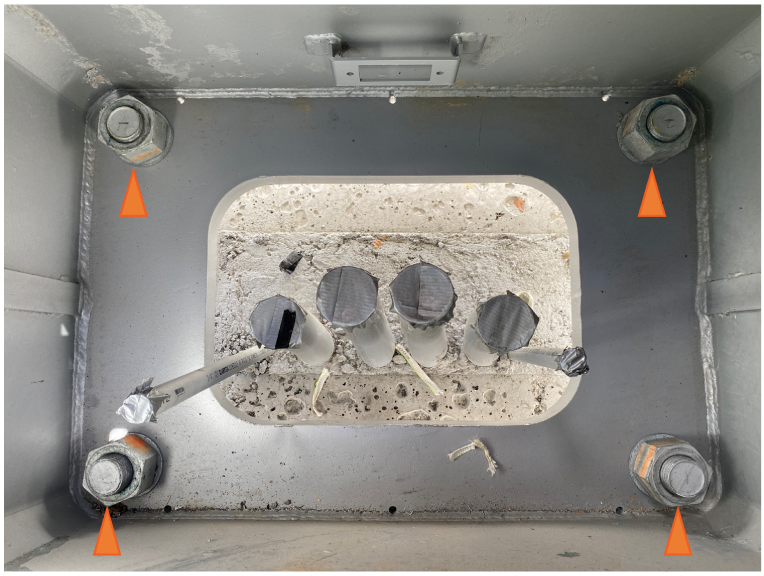

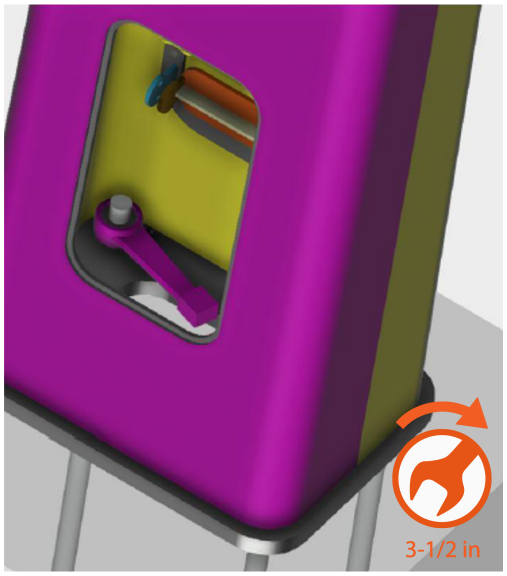

8. Mark the torqued connections.

9. Release the lifting slings from the hoisting bar.

10. Remove the protective wrapping from the arm of the mast.

Raise and Connect Arm

1. Locate the arm shipping fixture. Attach metal lifting cable sling between the shipping fixture and the crane hook.

2. Lift the crane hook until there is no slack in the sling.
3. Remove pin to release the arm shipping fixture from the support bar.

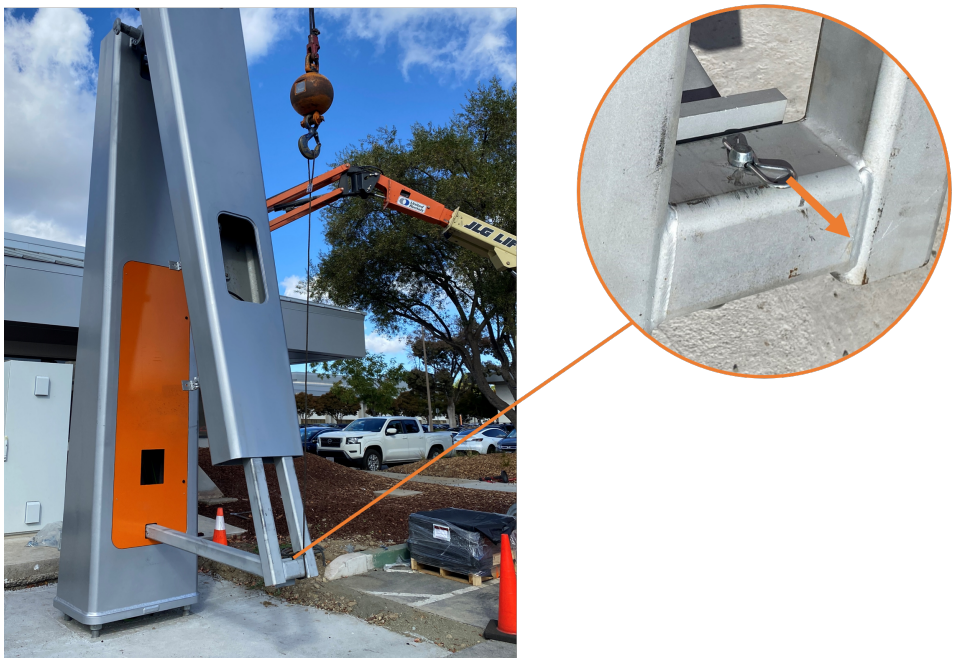

4. Use the crane to slowly lift the mast arm. Monitor the flexible conduit at the junction between pole and arm to ensure the conduit slides freely and does not catch or chafe.

5. Pause when the arm is nearly horizontal and the two connection plates begin to touch. Check the bolt hole alignment between the arm and pole. If required, use a bull pin or iron workers pry bar to align the bolt holes. Then slowly lift the arm until the connection plates mate completely.

6. Working through the the top and rear openings in the mast, install fasteners one at a time as follows:
    a. Install 1-1/2 in bolt with washer into a bolt hole from bottom up.

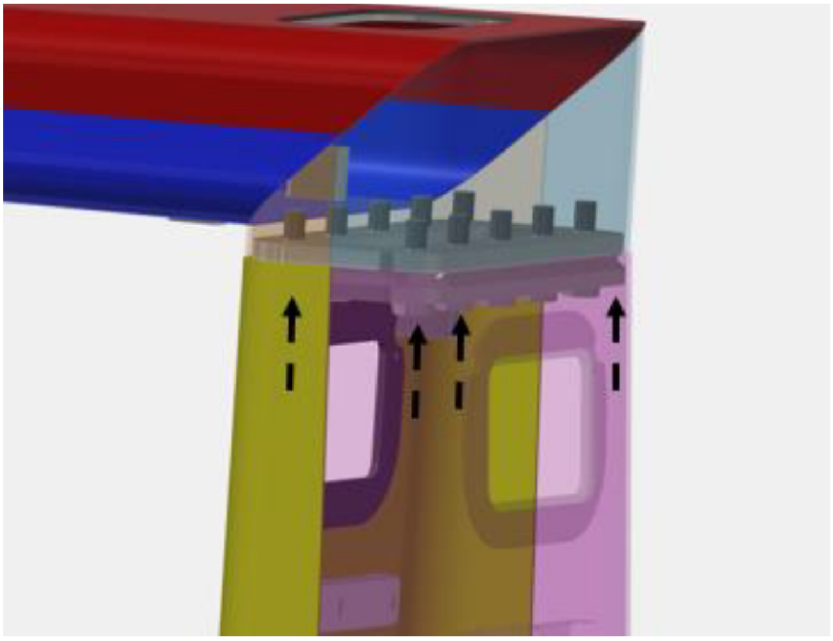

    a. Install 1-1/2 in washer and nut over the bolt. Use a 2-3/8 in socket to turn nut to snug tight condition.

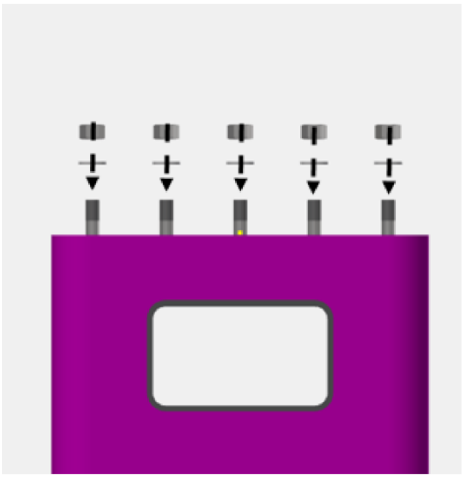

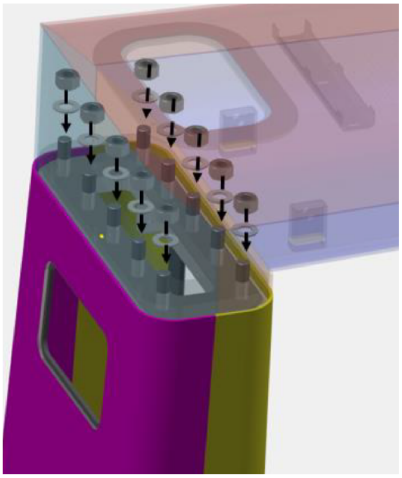

7. Apply Turn of Nut technique to torque fasteners. Use a 2-3/8 in socket and follow these procedures:
    a. Starting with an outermost pair of diametrically opposing fasteners, torque the fasteners.
    b. Torque the other outermost pair of diametrically opposing fasteners.
    c. Torque remaining fasteners by working your way inwards in the same fashion.

Remove Pivot Hinges

1. Remove pins (x2) from the pivot hinge.

2. Remove the collar **(a)** and rigging bars (x2) **(b)**.

> **CAUTION:** Each rigging bar weighs 23 kg (51 lb).

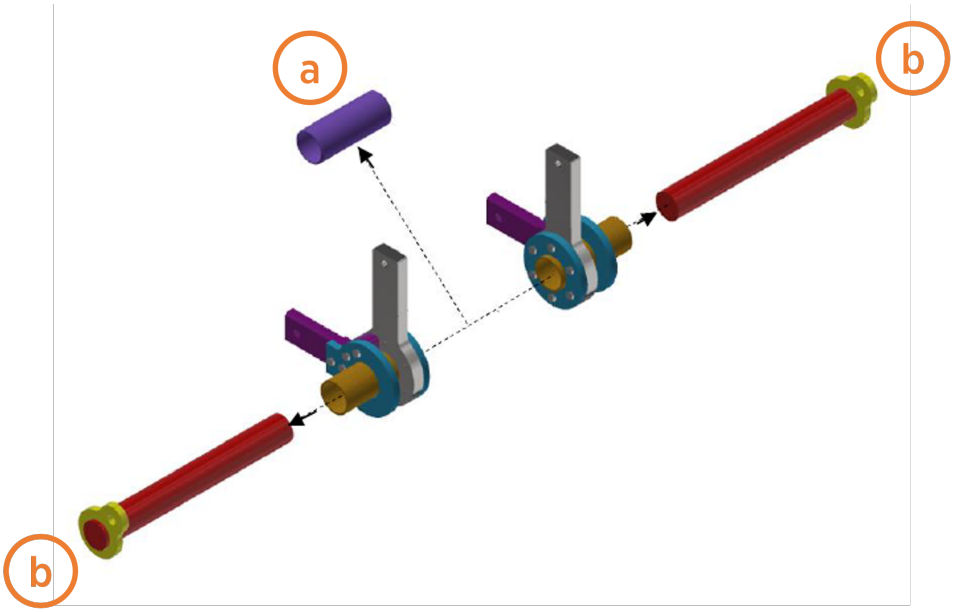

3. Remove bolts and washers (x12) at the pivot cap plates. Slide cap plates off.

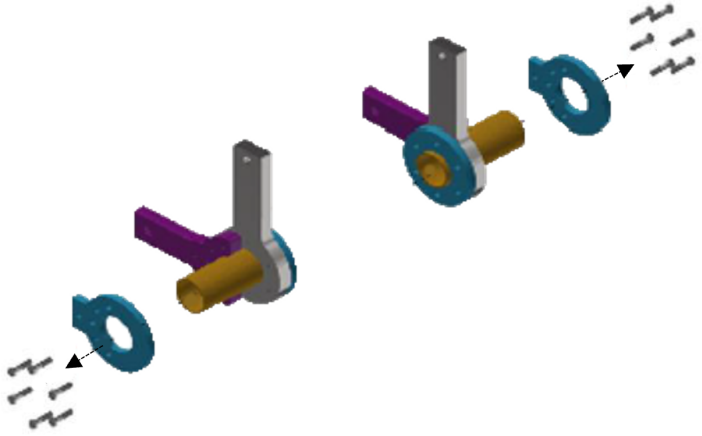

4. Remove bolts and washers (x12) at the pivot tube assembly. Slide pivot tube assemblies out.

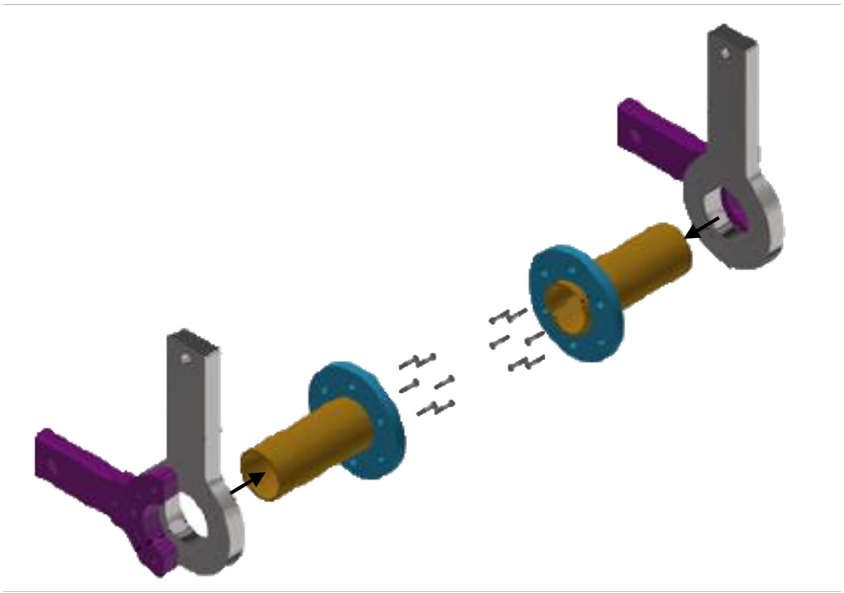

5. Hold pivot lug to prevent it from falling. Remove the clip to release the pivot lug. Repeat for other pivot lug.

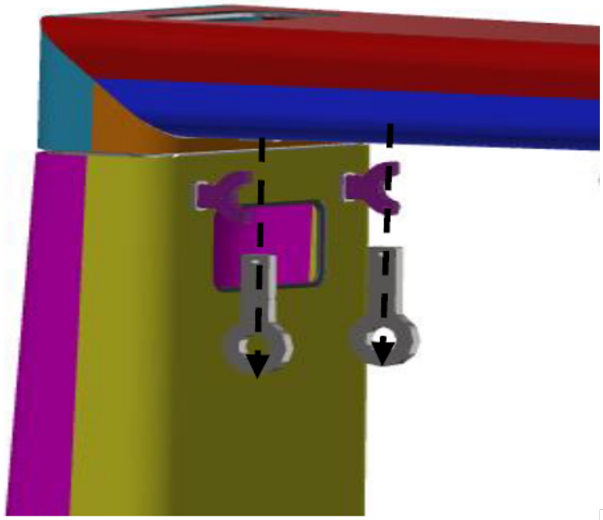

6. Hold pivot yoke to prevent it from falling. From inside the mast column, remove pin to release the pivot yoke. Repeat for other pivot yoke.

IMPORTANT: Save the pins. They will be used again when installing mast covers and panels.

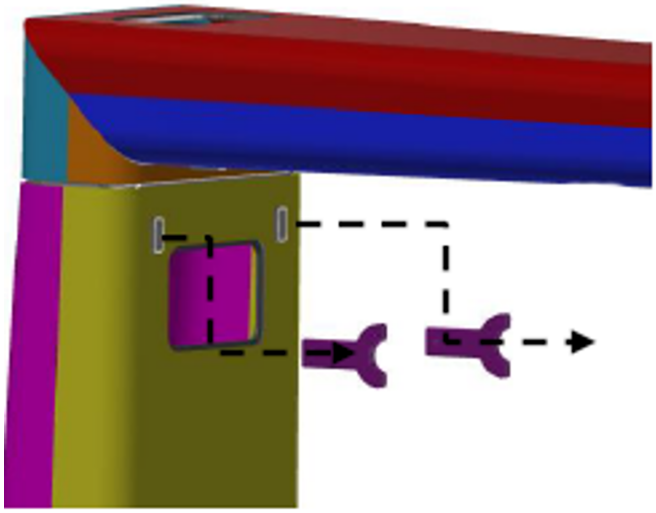

Remove Arm Shipping Fixture

1. Place wood dunnage below the arm shipping fixture.

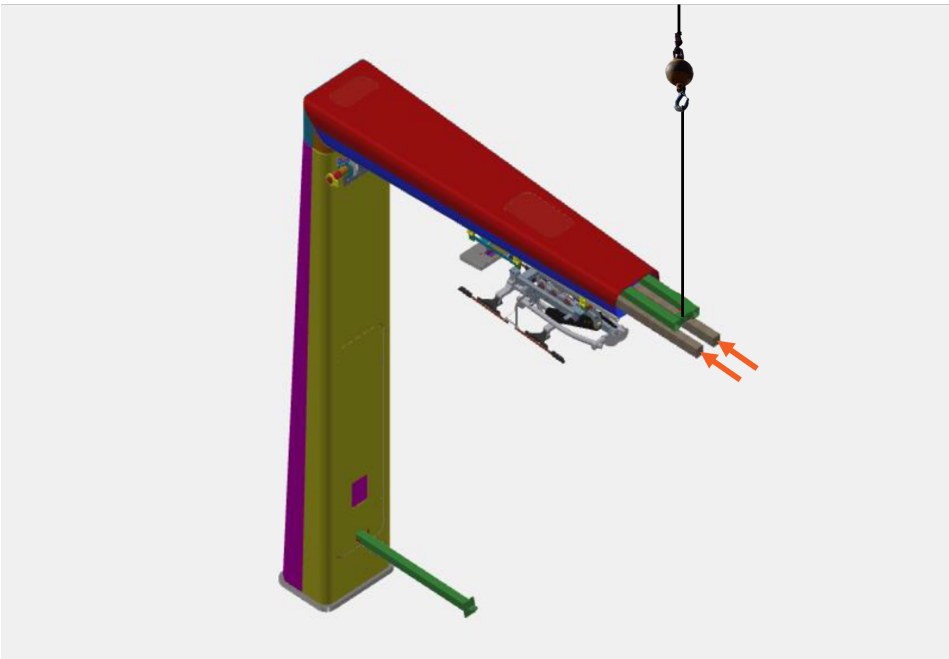

2. Remove the pins (x2) securing the arm shipping fixture, allowing the fixture to rest on the wood dunnage.

> **CAUTION:**The shipping fixture weighs 57 kg (125 lb). Use caution when removing the pins and keep hands clear of the area between the shipping fixture and wood dunnage.

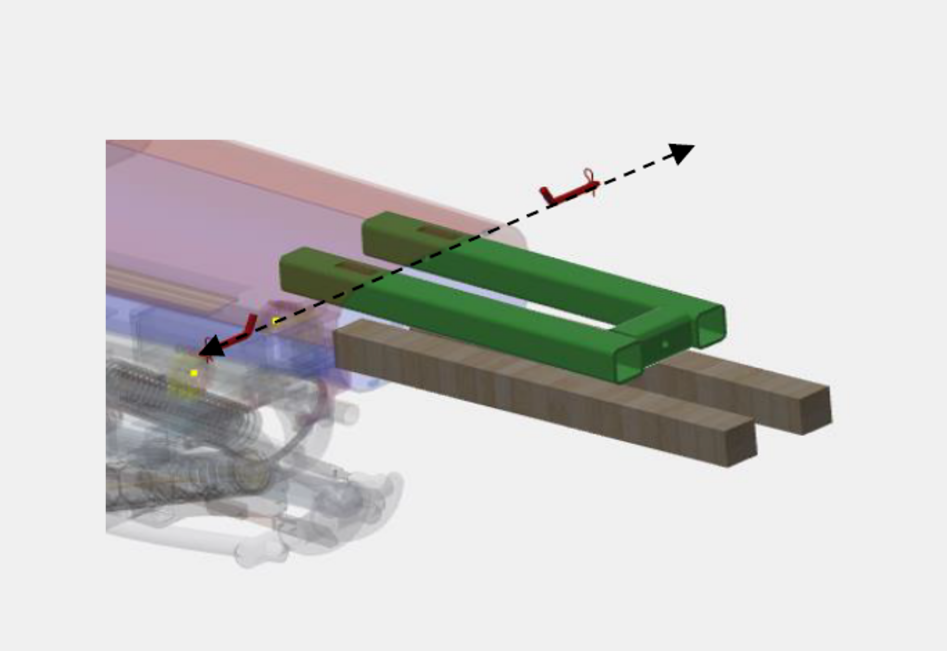

3. Carefully remove the shipping fixture from the structure.

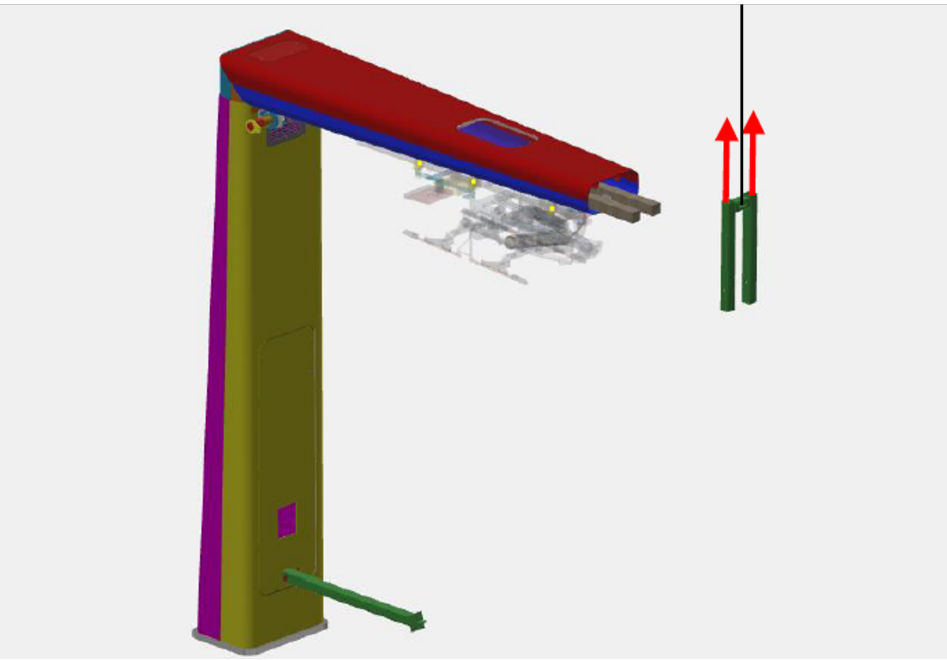

4. Remove the wood dunnage.

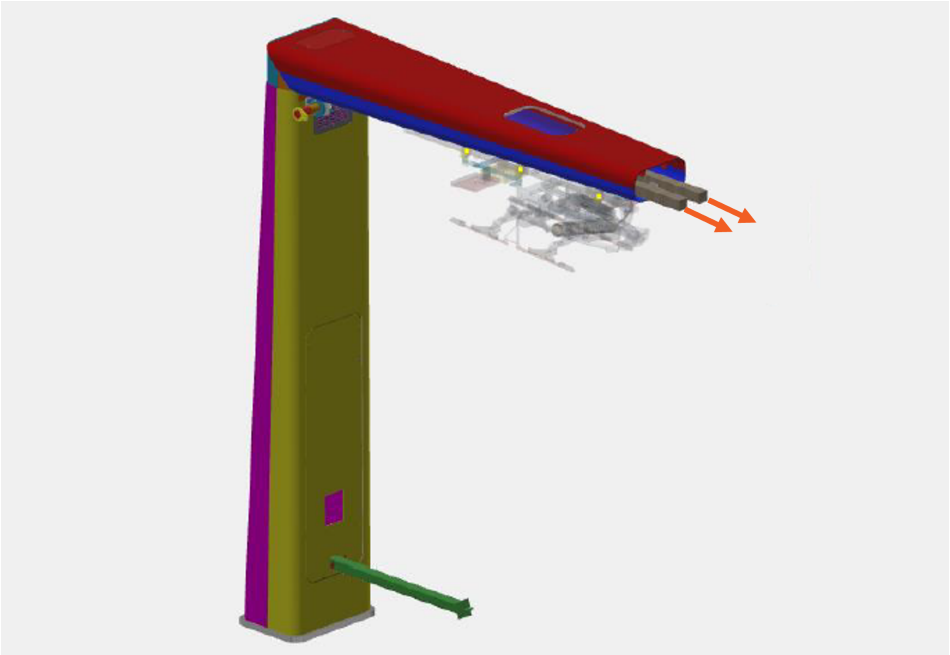

Remove Support Column

1. Brace the support column to prevent it from falling. Remove the pin securing the support column.

CAUTION: The support column weighs 44 kg (96 lb). Ensure the column is supported prior to pin removal.

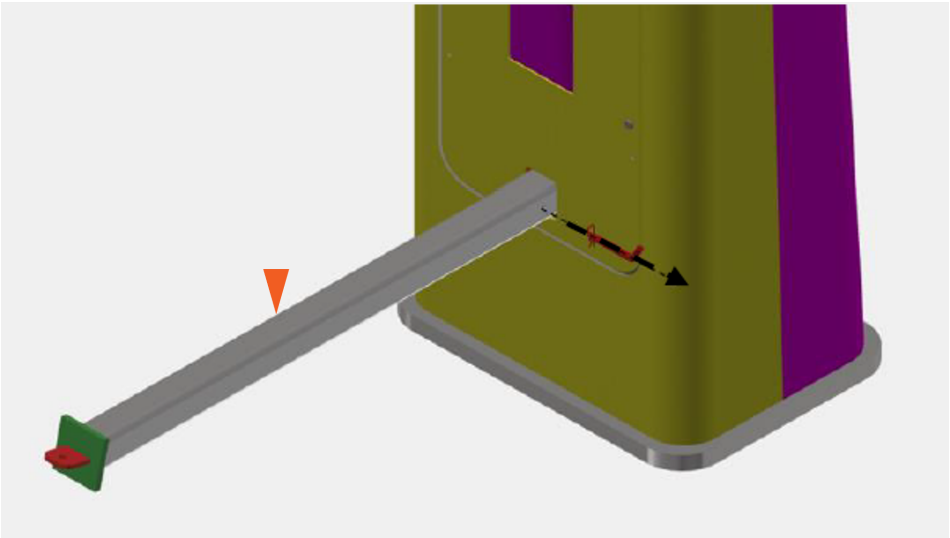

2. Remove the support column.

CAUTION: Two people are required to safely support the weight of the column during removal.

Open Mast Door

1. Loosen (do not remove) screws (x4) on mast door.

2. Quarter turn to unlock door latches (x2).

3. Open the mast door.

Remove Support Bridge

1. Locate the support bridge inside the mast.

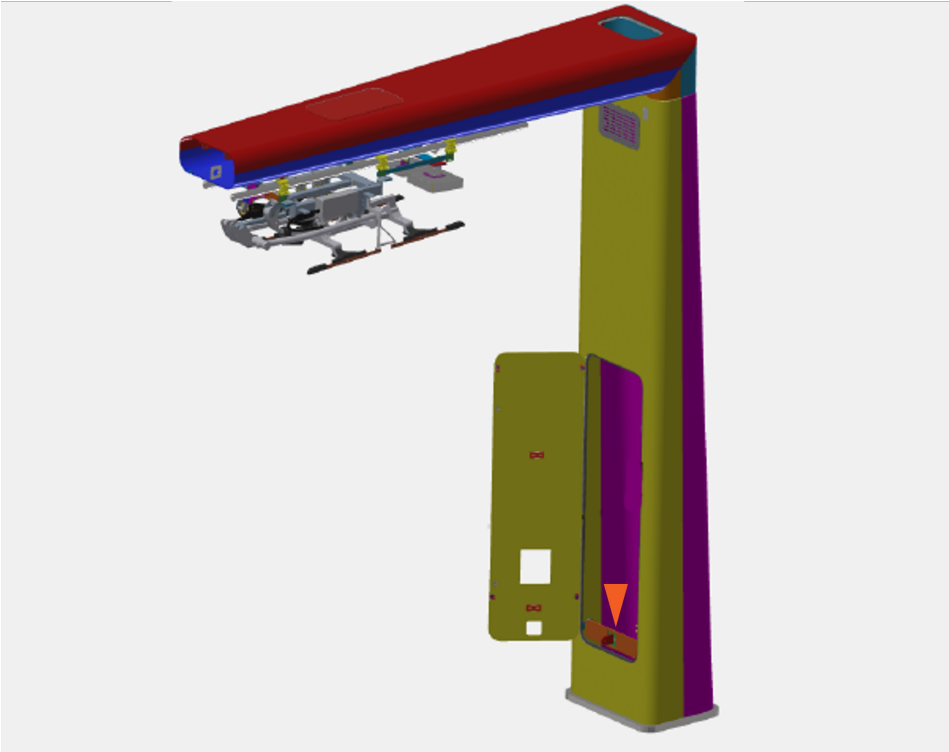

2. Hold the support bridge to keep it from falling and remove pins (x4) securing the support bridge.

   Note: The support bridge weighs 14.5 kg (32 lb).

3. Remove the support bridge.

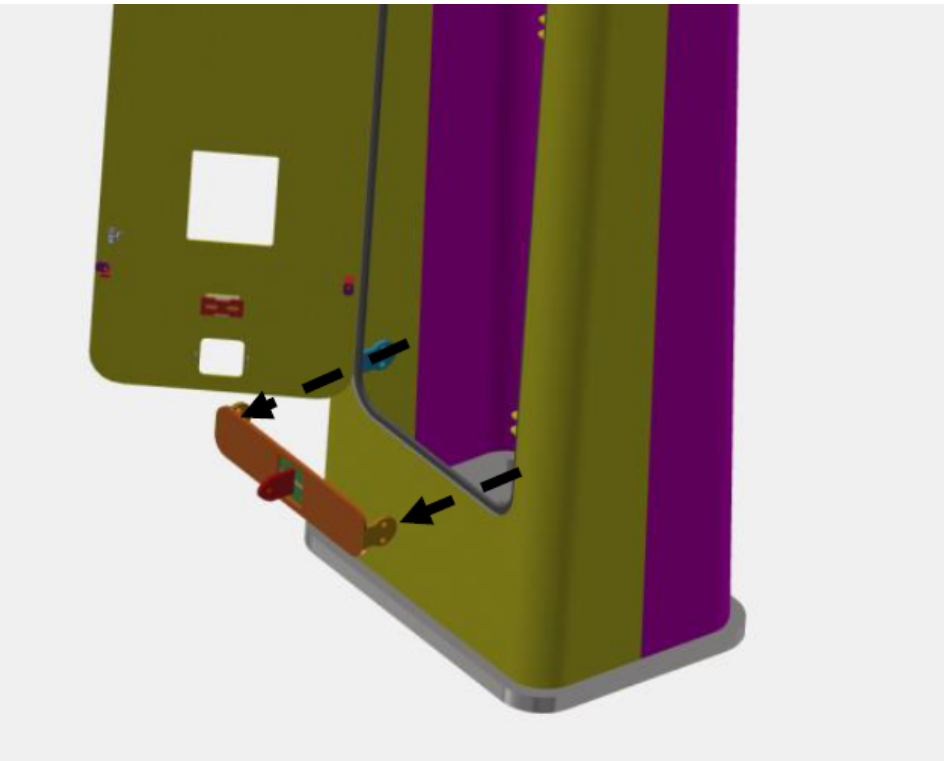

Install Mast Ground Bar

1. On the front interior face of the mast pole, locate the mast ground bar base.

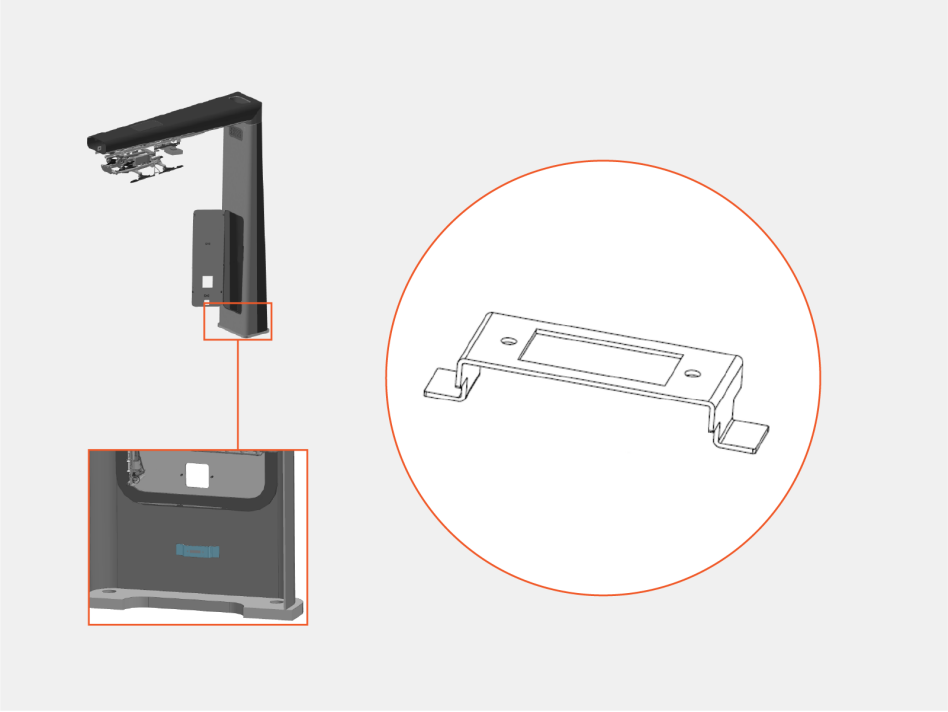

2. Install the mast ground bar onto the base. Torque fasteners to **19 Nm (14 ft-lb)**.

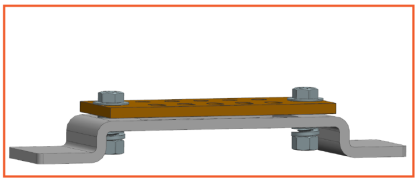

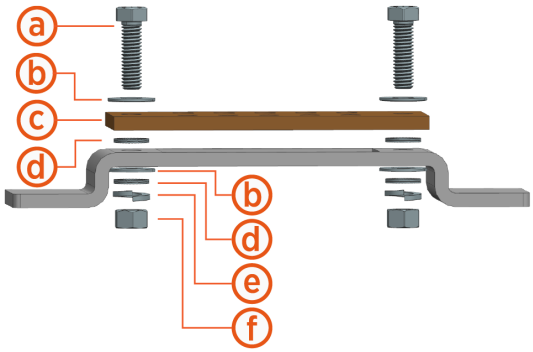

(a) 3/8 x 1-1/4 in bolt

(b) 3/8 in flat washer

(c) Mast ground bar

(d) 3/8 in dragon tooth washer

(e) 3/8 in lock washer

(f) 3/8 in hex nut

Install Knockout Cover

1. On the inside of the main access door, slide the knockout cover over two tabs on the door until the cover is flush with the door.

2. Insert wedge pins (x2) to fasten the knockout cover to the door.

Pull Low Voltage Cables

1. Familiarize yourself with the cables listed below. Refer to Appendix: Low Voltage Wire Reference.
    - Controller interface cable
    - Wi-Fi antenna coaxial cable
    - RFID antenna coaxial cable
2. Label both ends of the coaxial cables to ensure Wi-Fi and RFID antennas are connected correctly at the PD Controller.

    Note: The provided coaxial cables are interchangeable.
3. Feed the cable ends that will connect to the PD Controller into the front opening of the mast arm. Guide the cables down the mast pole.

4. Stop when the opposite cable ends reach the front opening of the mast arm. At the top access hatch, secure the cables so they do not slide further down into the pole.

Mount Schunk 201 Pantograph 4

WARNING: Do not install or service the charging station in inclement weather. If you work in snow, rain, or wind, you must use a weather-proof shelter that covers all boxes and components.

IMPORTANT: Ensure that the installation complies with all applicable codes and ordinances.

IMPORTANT: Keep components out of direct sunlight in a cool area until you install them.

CAUTION: Warranty Limitation

- If the charging station is not installed, commissioned, or serviced by a ChargePoint certified technician using a ChargePoint-approved method, it is *excluded* from all ChargePoint and other warranties and ChargePoint is not responsible.
- You must be a licensed electrician and complete training at chargepoint.com/installers to become ChargePoint certified and to access ChargePoint's web-based installer tools or ChargePoint Installer app.

CAUTION: Use low torque settings when working with power tools during installation or servicing. Over-torquing can damage the equipment.

Uncrate and Prepare Pantograph

To uncrate and prepare the pantograph, complete the following steps:

1. Remove protective wrapping and uncrate the pantograph.

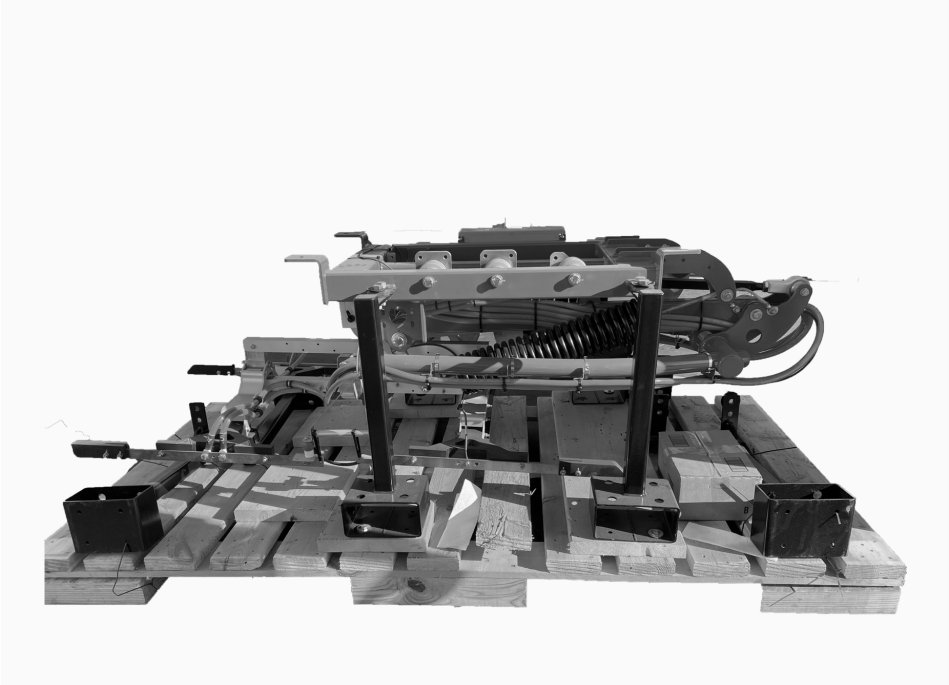

2. Remove the pallet bolts (x4).

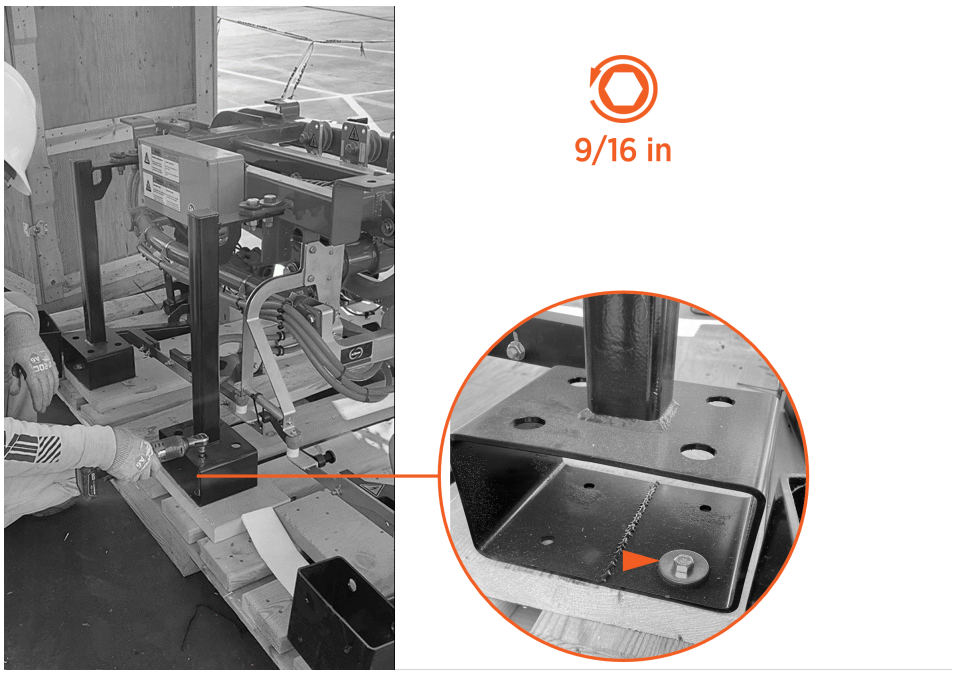

3. On the frame of the pantograph, mark the location of the high voltage DC terminals (positive, negative and ground).

4. Photograph the label on the pantograph and submit the photograph to the project manager.

IMPORTANT: If there are multiple pantographs being installed at the site, ensure there is some way to match each photograph to its corresponding pantograph. The label contains information required to complete commissioning, and will be difficult to view after the pantograph is installed at final height.

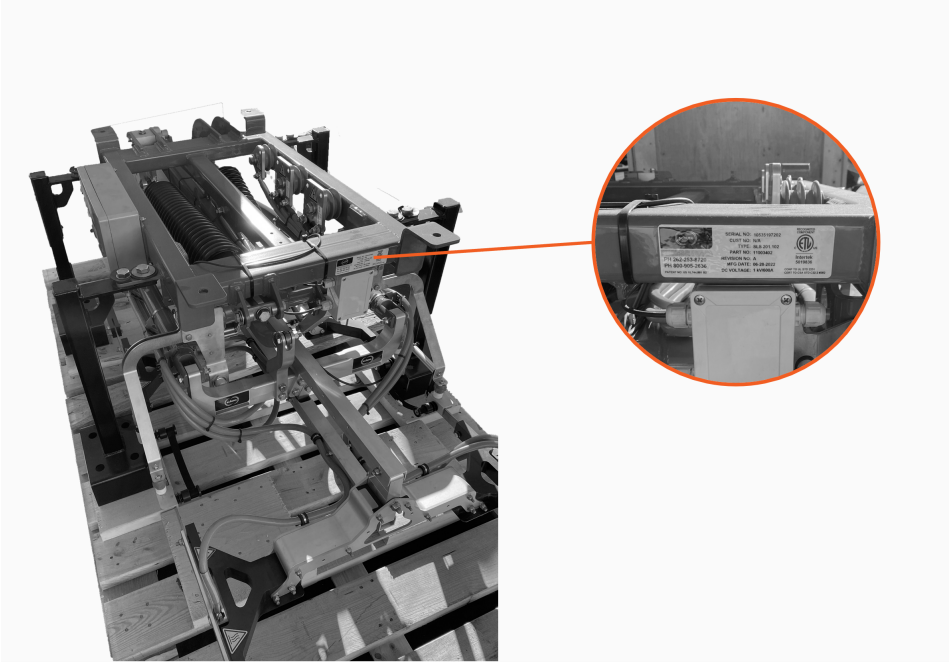

Prepare Mounting Clamps

To prepare the mounting clamps, complete the following steps:

1. At the pantograph mounting rails, loosen (do not remove) the rail clamps (x4).

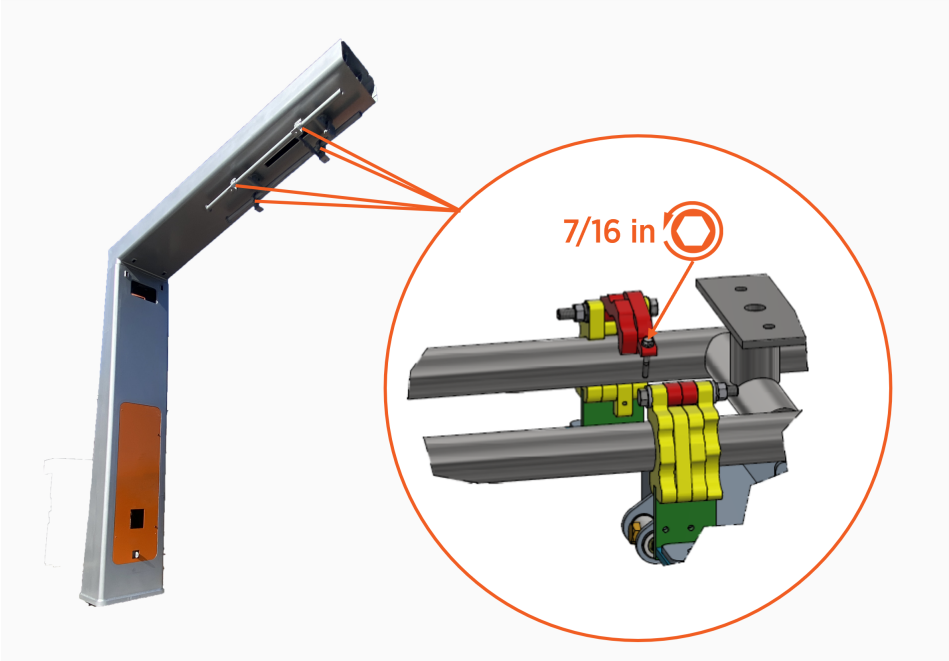

2. Slide and position the two front clamps forward of where the pantograph will mount. Slide and position the two rear clamps behind where the pantograph will mount.

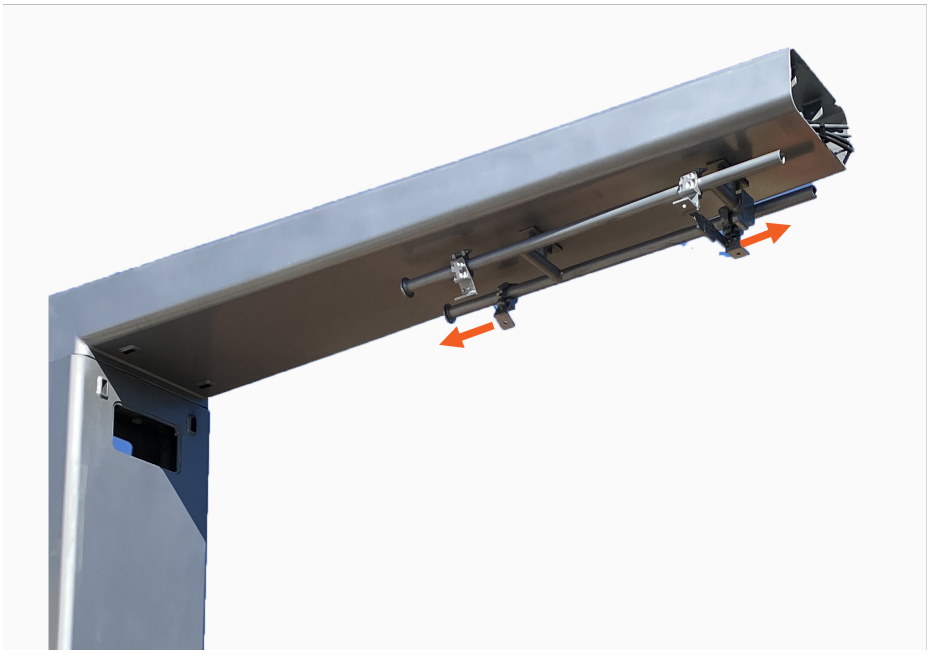

Mount Pantograph

To mount the pantograph, complete the following steps:

1. Insert forklift tines into pantograph lifting brackets.

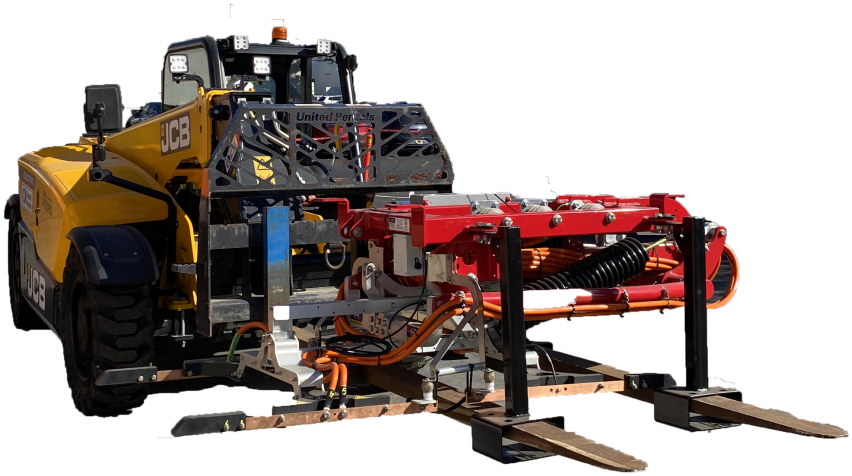

2. Lift and transport the pantograph to its intended position at the mounting rails. Slide the rail clamps to align clamp tabs to the pantograph mounting tabs.

IMPORTANT:

- Check the site plan to confirm the pantograph installation orientation. Be careful you do not install the pantograph rotated 180 degrees from intended orientation. The system will not operate successfully if the pantograph is incorrectly installed.
- The pantograph is able to shift up to 18 inches along the mounting rails. Check site plans for pantograph positioning before fixing the pantograph in place.

3. Slide each front rail clamps to align its mounting support with a pantograph mounting support. At each mounting point, fasten the supports together with 5/8 x 2 in hex bolt, 5/8 in flat washer, 5/8 in lock washer, and 5/8 in hex nut. Hand tighten.

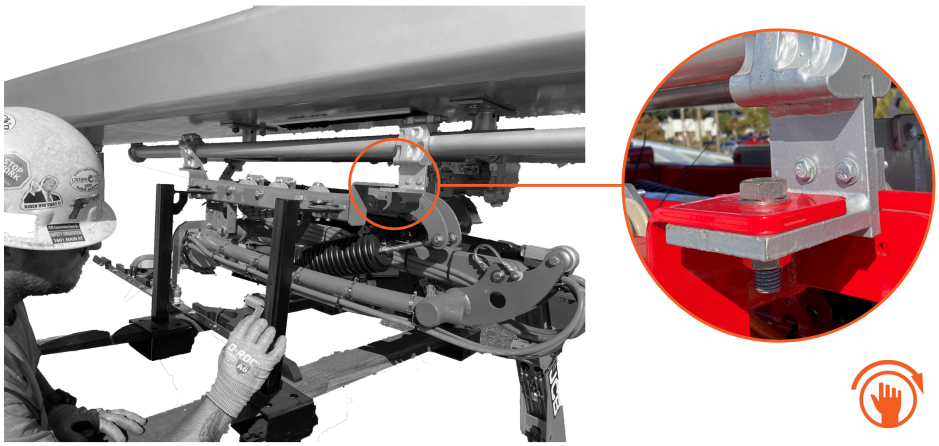

4. Slide the rear two clamps to align each clamp mounting support with a pantograph mounting support. At each mounting point, fasten the supports together with 5/8 x 2 in hex bolt, 5/8 in flat washer, 5/8 in lock washer, and 5/8 in hex nut. Hand tighten.

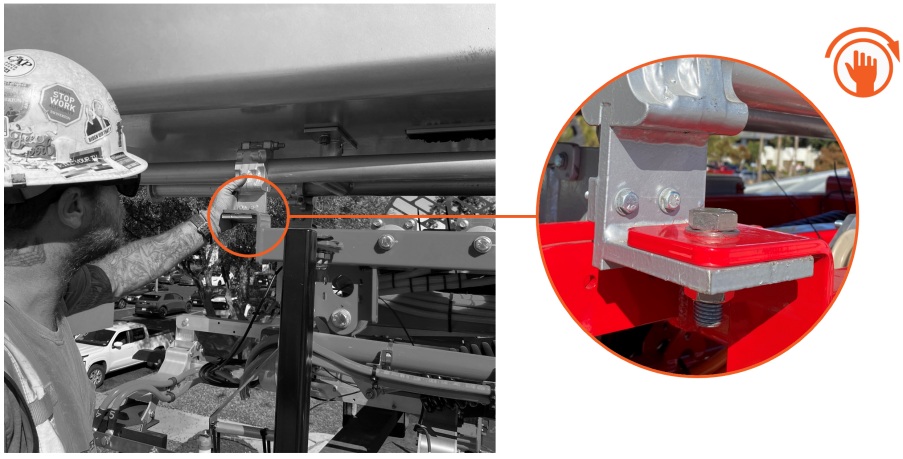

5. Torque the fasteners to **99 Nm (73 ft-lb)**. Use a 15/16 in socket.

IMPORTANT: After mounting the pantograph, double-check the fasteners to ensure they are torqued to the correct value.

6. Tighten the rail clamps (x4). Torque to **4.7 Nm (42 in-lb)**.

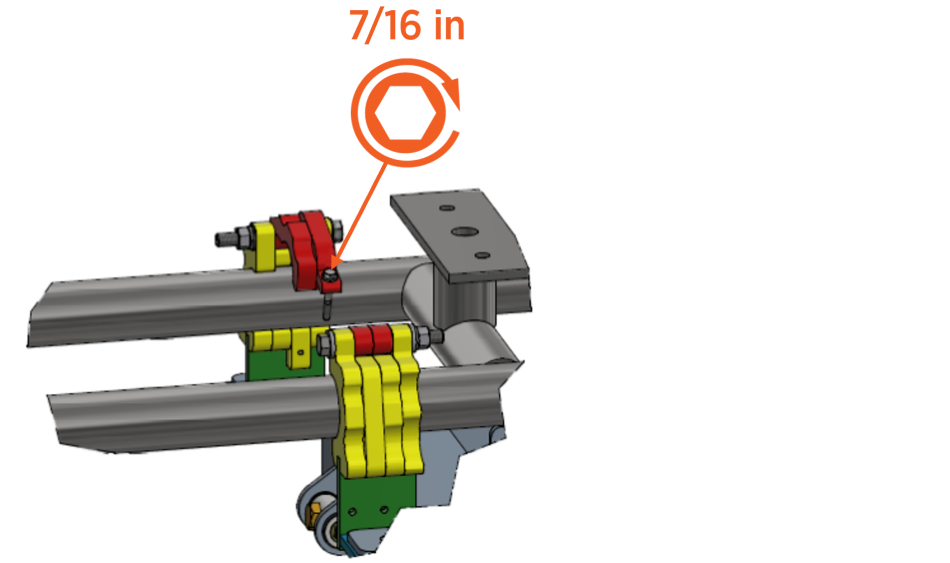

7. Lower the forklift tines slightly to release the weight of the pantograph. Do not remove the forklift from the pantograph lifting brackets.

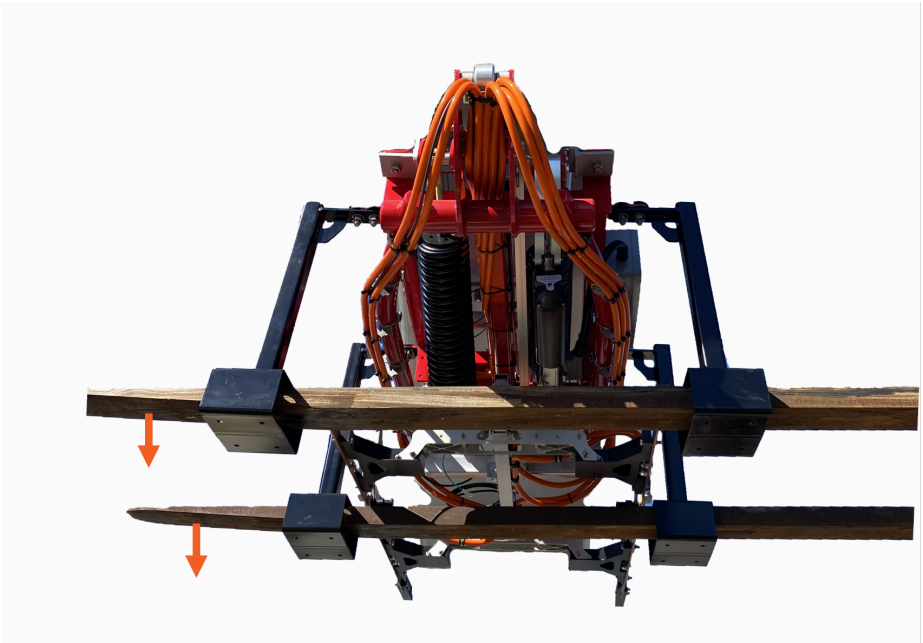

8. Remove fastener to release the pantograph lifting bracket (x4). Slide the brackets off the forklift tines or up against the forklift.

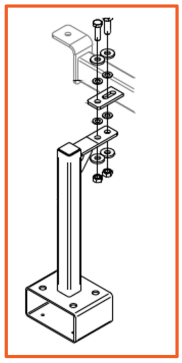

15/16 in

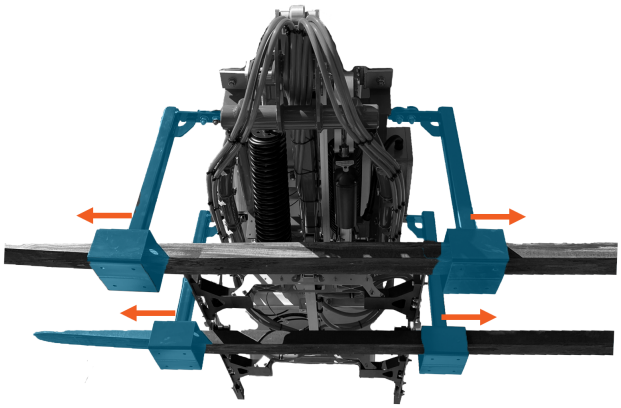

9. Remove the forklift.
10. Cut and remove zipties (x4) to free the pantograph charging rails.

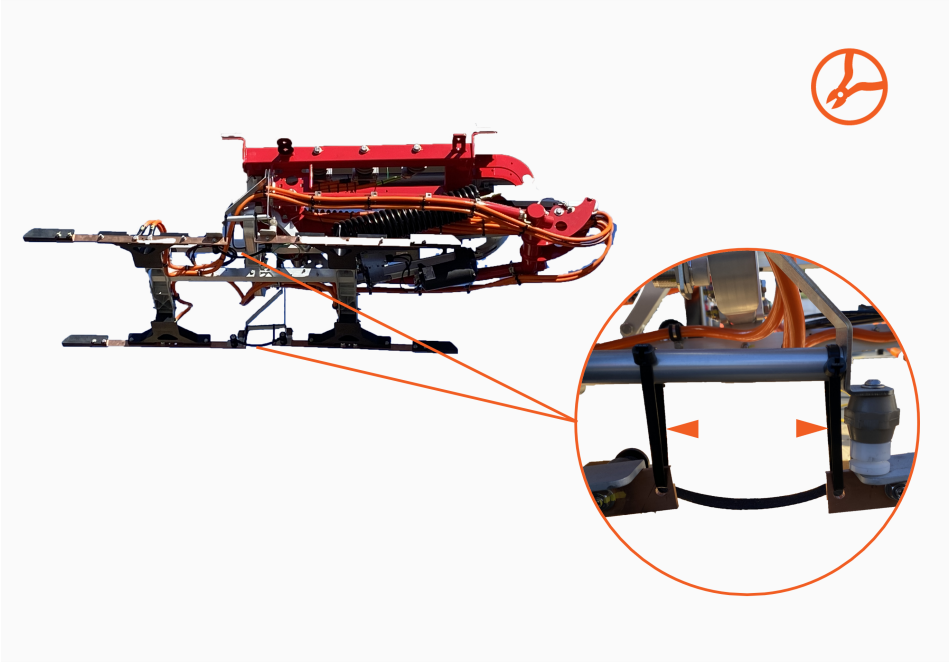

Mount Power Link 2000 and PD Controller 5

WARNING: Do not install or service the charging station in inclement weather. If you work in snow, rain, or wind, you must use a weather-proof shelter that covers all boxes and components.

IMPORTANT: Ensure that the installation complies with all applicable codes and ordinances.

IMPORTANT: Keep components out of direct sunlight in a cool area until you install them.

CAUTION: Warranty Limitation

- If the charging station is not installed, commissioned, or serviced by a ChargePoint certified technician using a ChargePoint-approved method, it is *excluded* from all ChargePoint and other warranties and ChargePoint is not responsible.
- You must be a licensed electrician and complete training at chargepoint.com/installers to become ChargePoint certified and to access ChargePoint's web-based installer tools or ChargePoint Installer app.

CAUTION: Use low torque settings when working with power tools during installation or servicing. Over-torquing can damage the equipment.

CAUTION: While installing fasteners inside enclosures, make sure not to drop the fasteners inside conduit openings. You may use conduit caps or covers to temporarily cover the conduit openings.

Parts Needed

To prepare for Power Link 2000 and PD Controller mount, find the following parts:

- Power Link 2000 assembly
- PD Controller assembly
- Parts from the Mast Installation Parts Crate:
    - Unistruts (x2)
    - Power Link 2000 mouting base
    - 1/2 in bolts, 1/2 in washers, and 1/2 in nuts (x6 each)
    - M6 x 25 mm screws (x8)
    - 1/2 in bolts, 1/2 in washers, 1/2 in nuts (x4 each)
    - 5/16 in bolts and 5/16 in washers, 5/16 in spring nuts (x4 each)
- 3-1/2 in strut pipe strap (contractor provided)

Install Power Link 2000 Mounting Base

1. Open the mast door.
2. Remove fasteners (x2) to release the HV DC conduit shipping bracket from the mast.

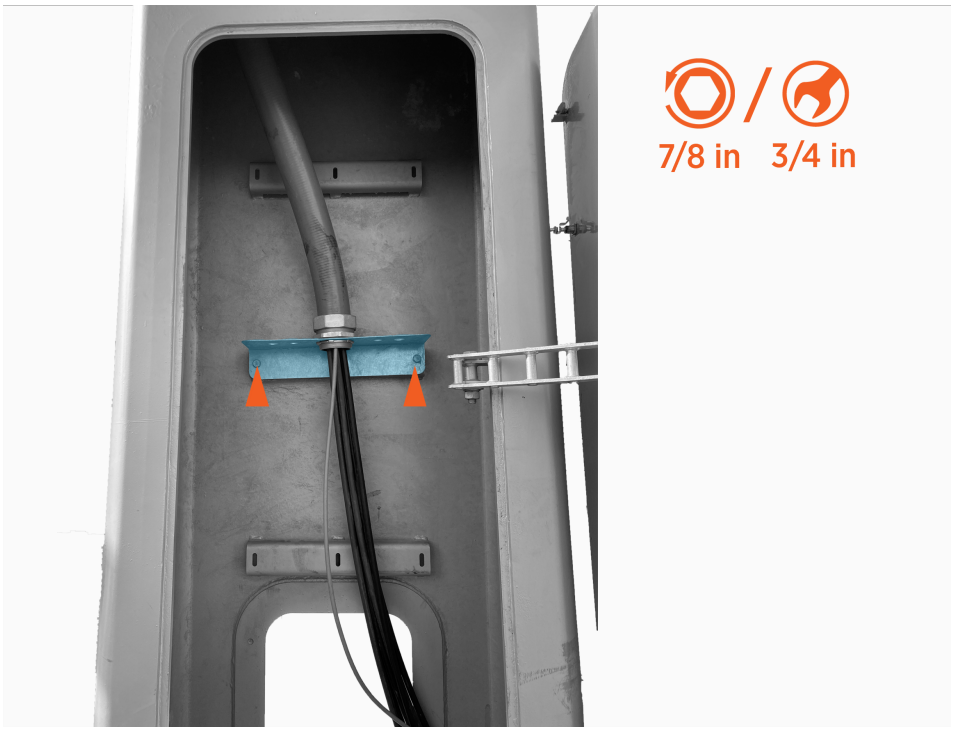

3. Remove the lock nut to release the HV DC conduit from the shipping bracket. Slide the nut and shipping bracket off the HV DC conduit and wires.

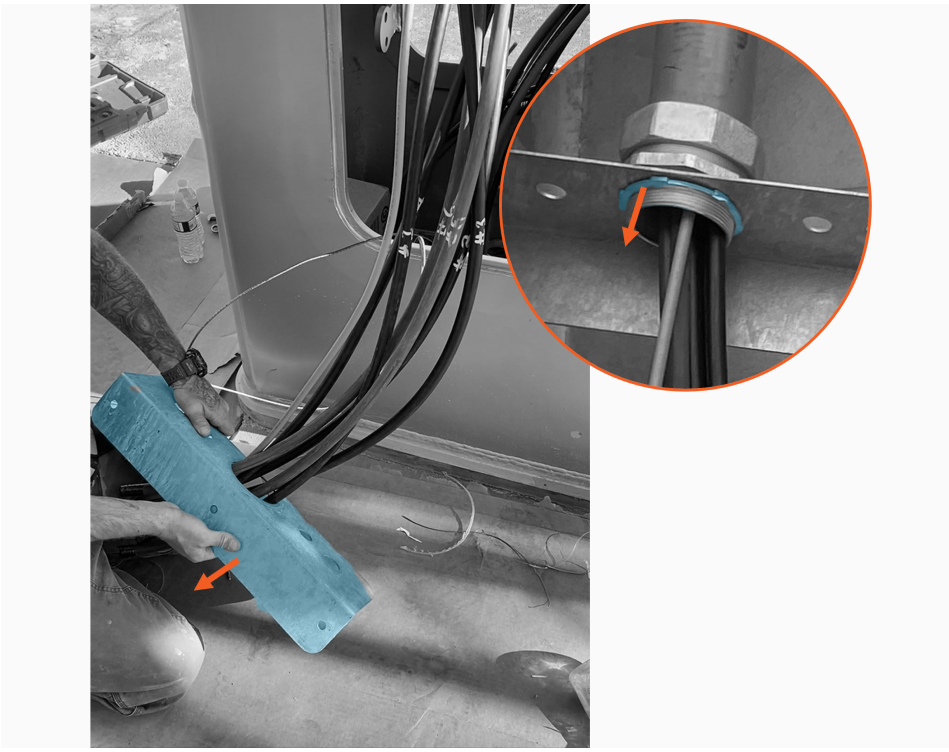

4. Remove the remaining fitting from the HV DC conduit.

5. At the top of the mast, pull the HV DC wires out the pantograph access opening to fully retract wires into the lower end of the wire conduit. This clears space in the mast for mounting the Power Link 2000.

6. Install the Power Link 2000 mounting base using 1/2 in bolt, 1/2 in washer, and 1/2 in nut (x6 each). Ensure the base is level.

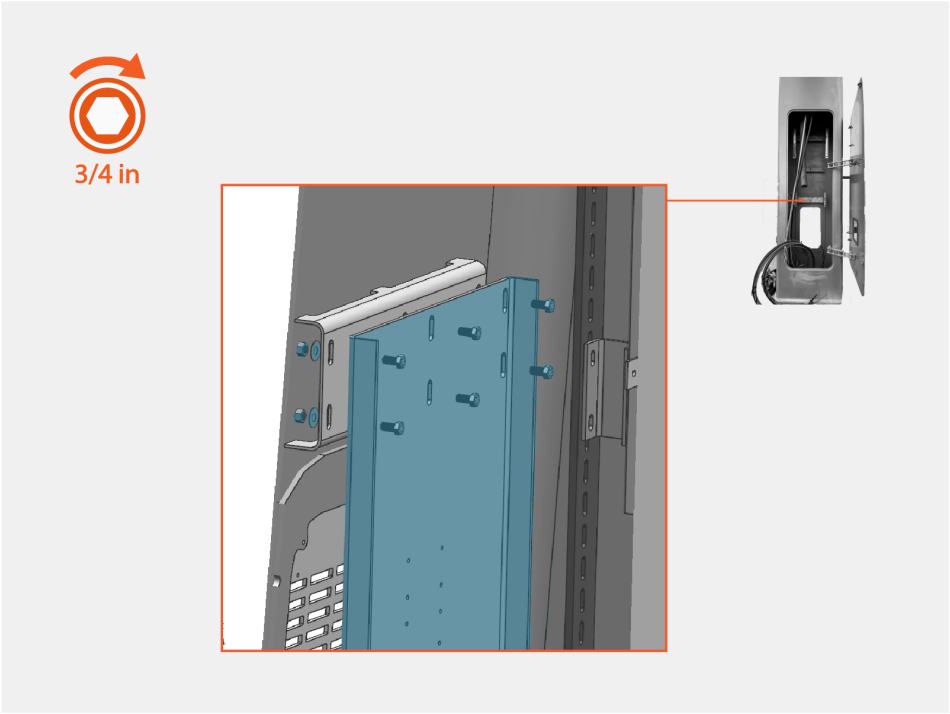

7. Torque fasteners (x6) to **50 Nm (37 ft-lb)**.

IMPORTANT: After mounting the base, double-check the fasteners to ensure they are torqued to the correct value.

Lift Power Link 2000

1. At the top of the Power Link 2000, locate four preinstalled eye bolts and lifting straps.

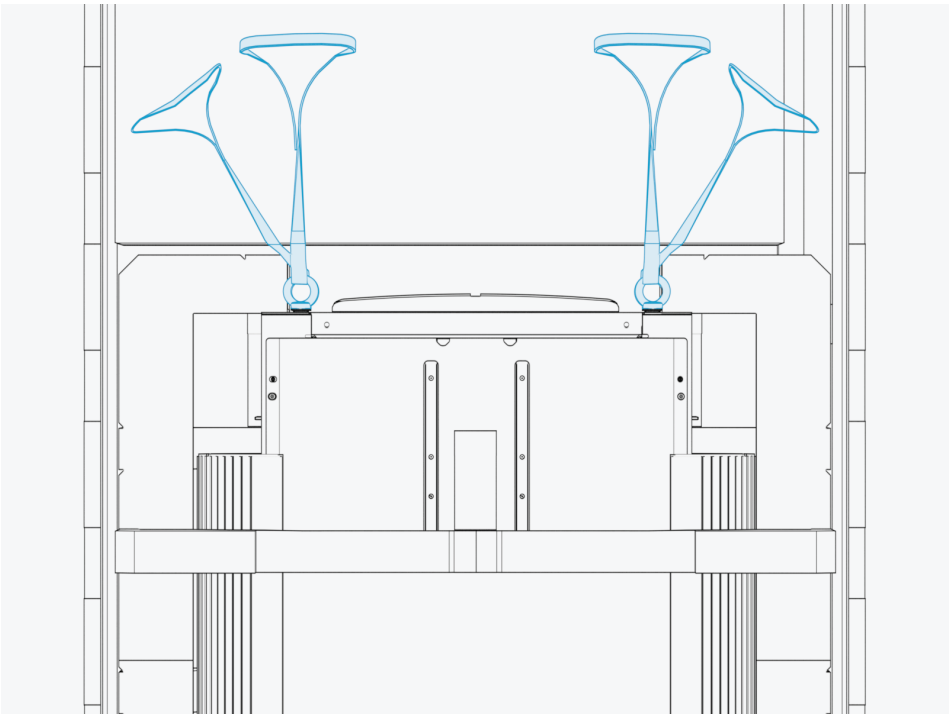

2. Lift up the Power Link 2000 by the lifting straps to eye level.

   Note: Use a forklift or service cart with retaining straps.

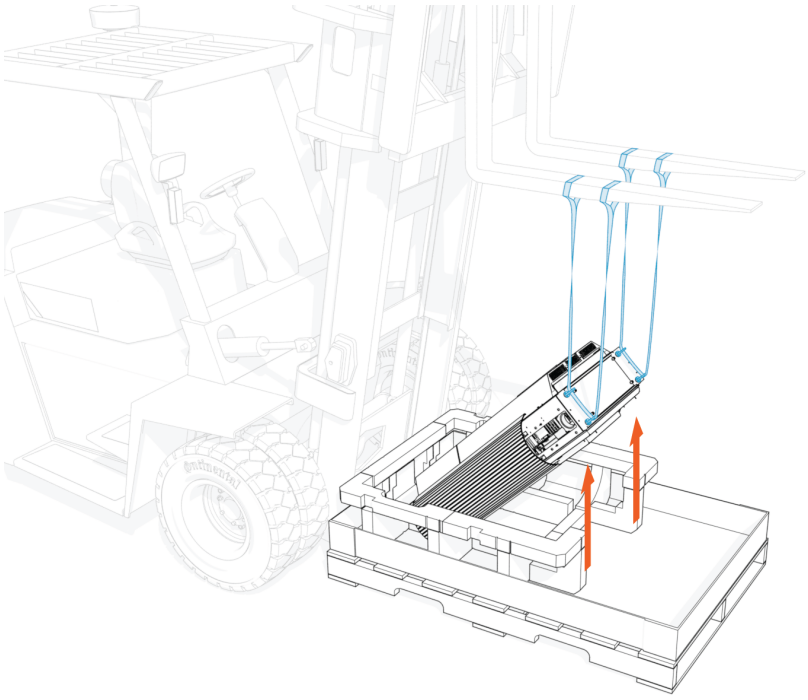

Open Power Link 2000

1. Quarter turn the door latches (x2) to unlock the door.

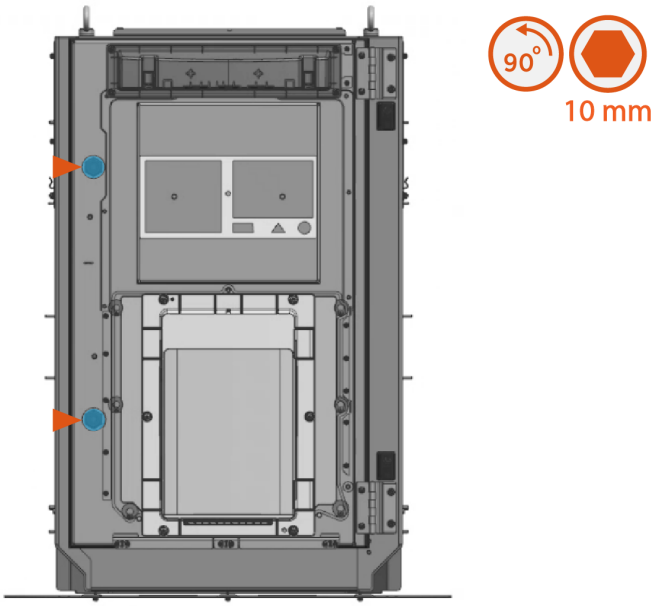

2. Open the door and engage the door stopper.

3. Slide the bus bar safety cover up to remove from hooks (x2) and latches (x2).

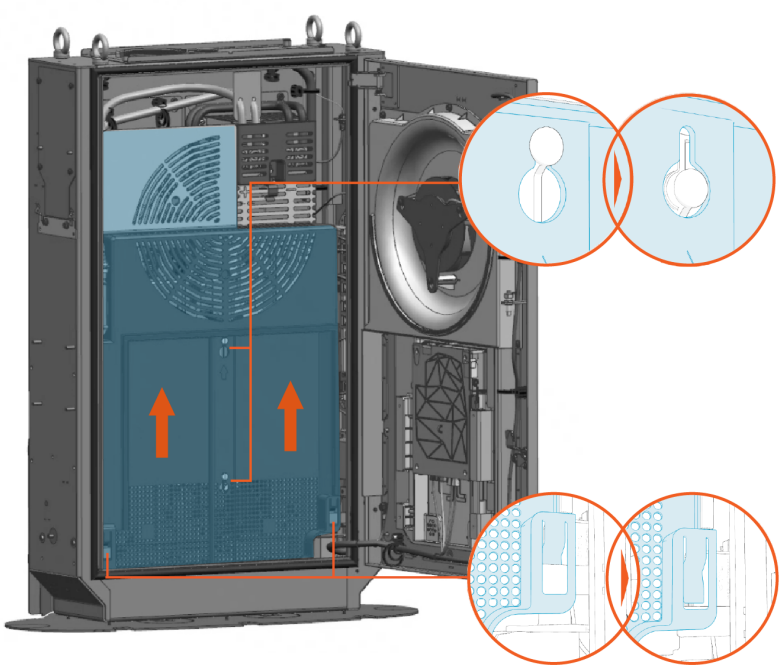

Save Parts

Safely set aside the bus bar safety cover. This part will be reinstalled when completing the Pantograph Down 2000 system install.

Prepare Power Link 2000 Gland Plate

1. Remove screws (x6) from the Power Link 2000 bottom gland plate. Save screws for later reinstall.

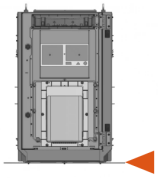

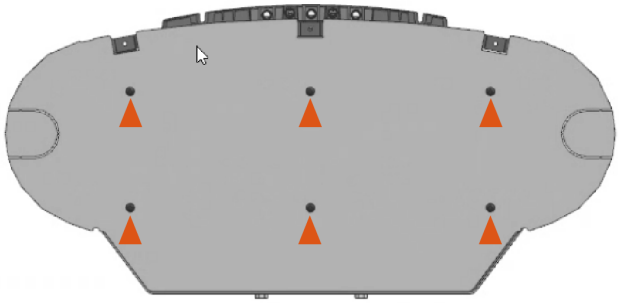

2. Remove the gland plate.

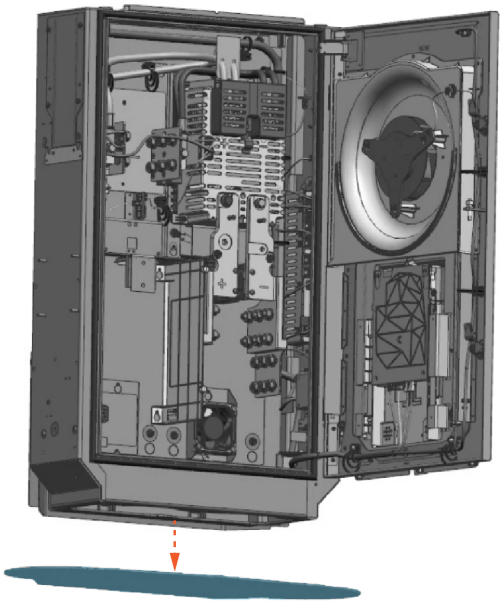

3. Consult the site plan to identify the remaining HV DC conduits, LV DC conduits, and cable gland required for the Power Link 2000. Use a hydraulic hole punch to create the needed openings.

IMPORTANT:

- There is limited space within the Power Link 2000 for bending HV DC wires. HV DC conduit holes must be punched at a location that aligns wire entry with their intended bus bar landings. See Wiring Overview for more information.
- Illustrations in this guide depict a sample conduit configuration. Actual conduit quantity, size, and position at the gland plate will vary by site.

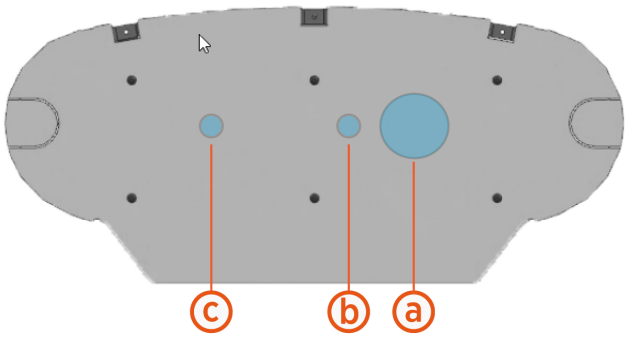

Sample conduit and cable gland hole pattern:

(a) HV DC input from Power Block

(b) LV DC input from Power Block

(c) Ground to mast

4. Reinstall the gland plate. Torque screws (x6) to **4.5 Nm (40 in-lb)**.

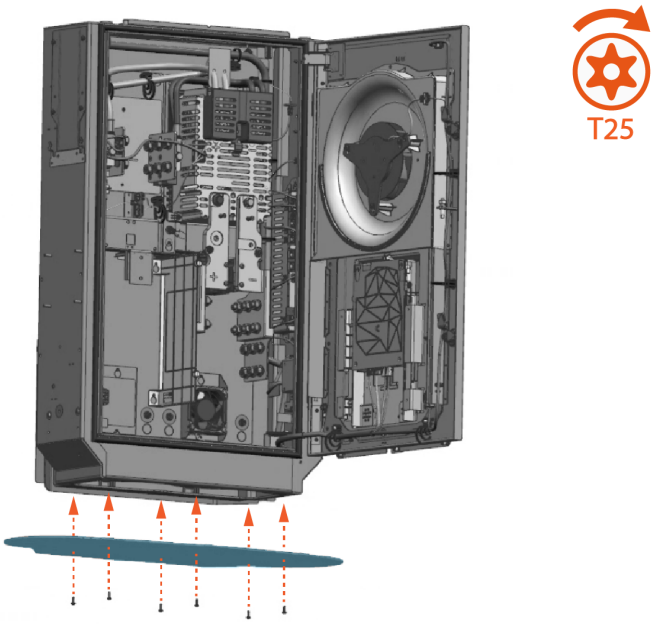

5. Disengage the door stopper and close the Power Link 2000 door.

Mount Power Link 2000

1. Transport the Power Link 2000 to the mast. Align mounting holes on the rear of the Power Link 2000 to the mounting base.

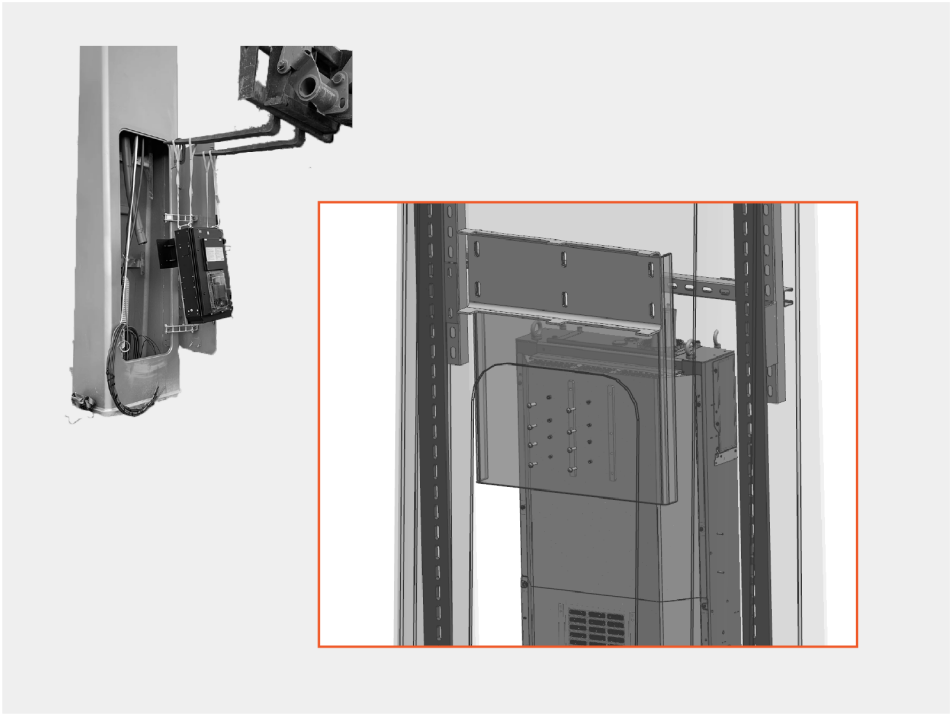

2. Mount the Power Link 2000 to the base with M6 x 25 mm screws (x8).

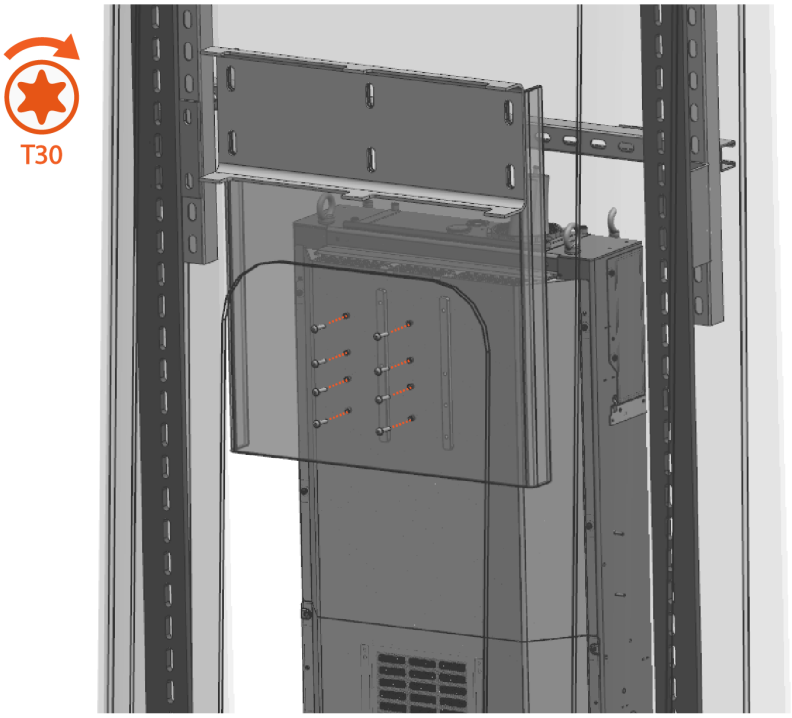

3. Torque the fasteners to **5.6 Nm (50 in-lb)**.

> **IMPORTANT:** After mounting the enclosure, double-check the fasteners to ensure they are torqued to the correct value.

4. Release the lifting straps and remove the eye bolts (x4) and rubber washers (x4). Use either an adjustable wrench or screwdriver's shaft to loosen the eye bolts.

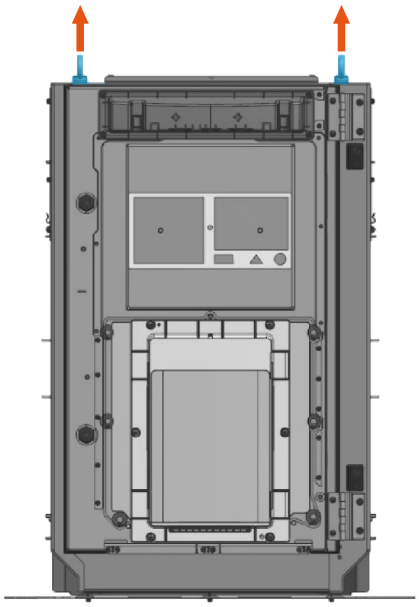

Connect Power Link 2000 HV DC Output Conduit

1. Open the Power Link 2000 door and engage the door stopper.
2. Connect HV DC output conduit to the Power Link 2000 top plate.

IMPORTANT: Ensure the conduit fitting is installed with no gaps at the top plate. A tight fit is required to prevent moisture and water from entering the enclosure.

3. Use 3-1/2 in strut pipe strap (contractor-supplied) to secure the HV DC conduit to the strut channel.

Install PD Controller Mounting Struts

1. Install PD Controller mounting unistruts:
    - Position the lower unistrut approximately 143 mm (5.63 in) above the top of the Power Link 2000.
    - Position the upper unistrut such that there is 419 mm (16.5 in) separation between the unistruts.
    - Ensure the struts are level.
    - Fasten the unistruts with 1/2 in bolt, 1/2 in washer, 1/2 in nut (x2 each per unistrut).

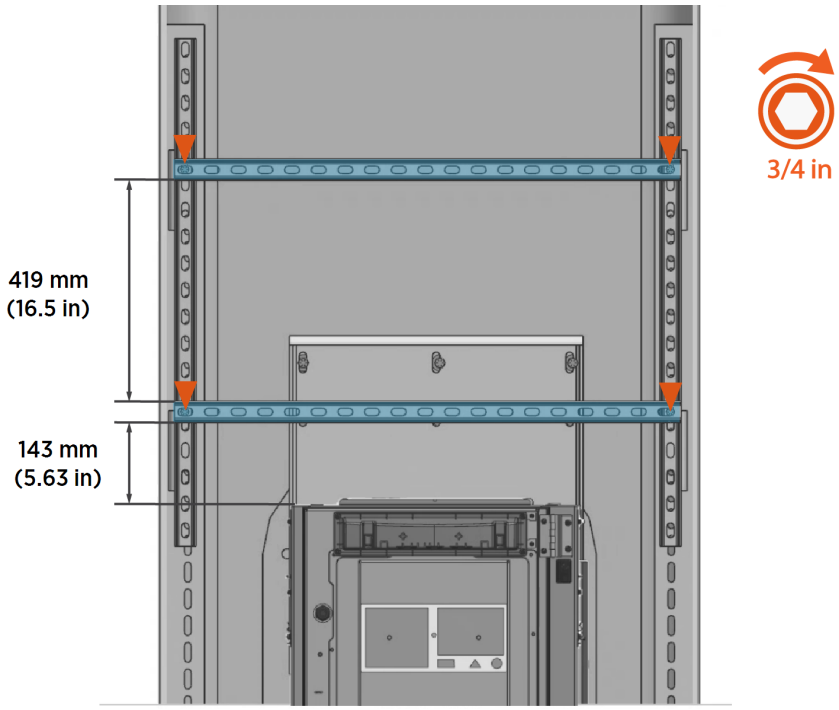

2. Torque fasteners to **50 Nm (37 ft-lb)**.

IMPORTANT: After mounting the struts, double-check the fasteners to ensure they are torqued to the correct value.

3. Slide 5/16 inch spring nuts (x2) into each unistrut.

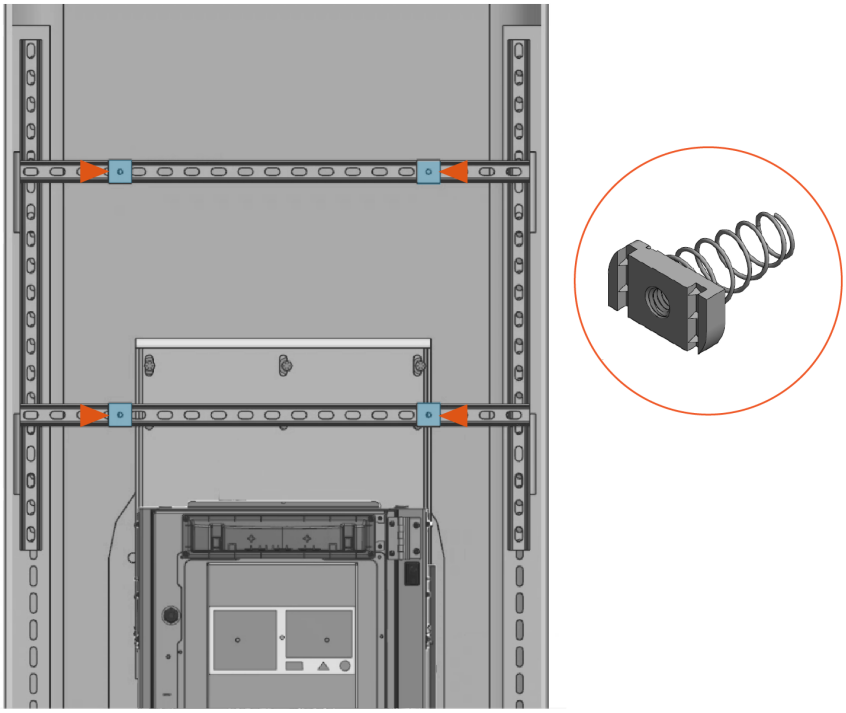

Mount PD Controller

1. Lift the PD Controller out of its package and stand it vertically on level ground.
   Note: The PD Controller weighs 32.2 kg (71 lb) and can be lifted by two people.
2. Insert forklift tines into the lifting brackets.

3. Lift and transport the enclosure to the mast. Center the PD Controller in front of the mounting struts.

4. Align the spring nuts with the PD Controller mounting tabs.

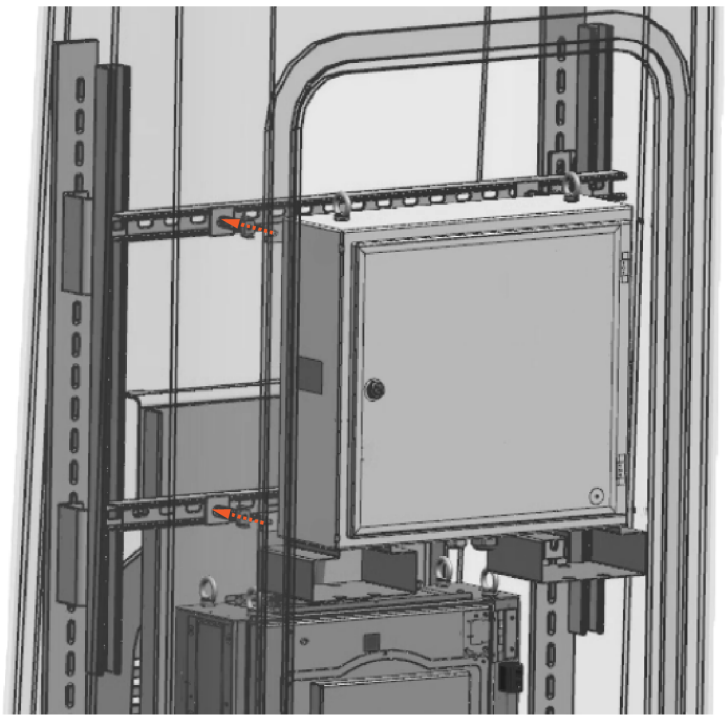

5. Fasten the PD Controller to the mounting base with 5/16 in bolt and 5/16 in washer (x4 each).

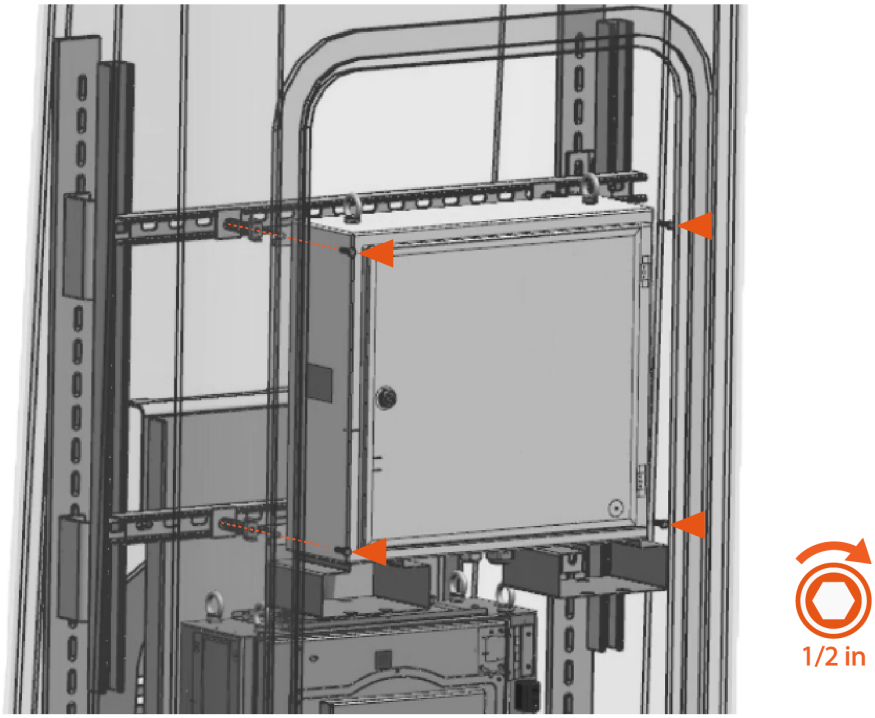

6. Torque fasteners to **10 Nm (90 in-lb).**

IMPORTANT: After mounting the enclosure, double-check the fasteners to ensure they are torqued to the correct value.

7. Remove the forklift.

8. Remove nuts at lifting brackets (x4 nuts per bracket).

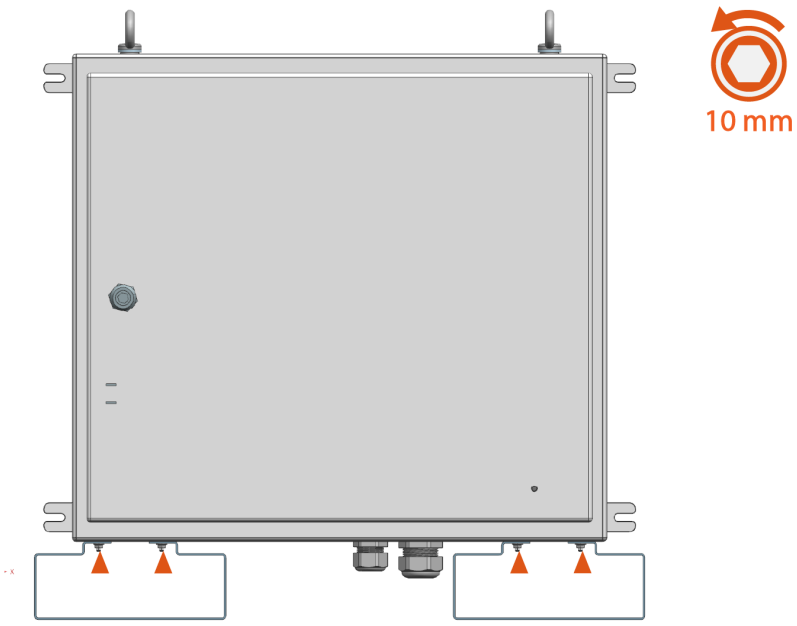

9. Remove lifting brackets.

   Note: Keep lifting brackets for any future removal of the PD Controller (as needed).

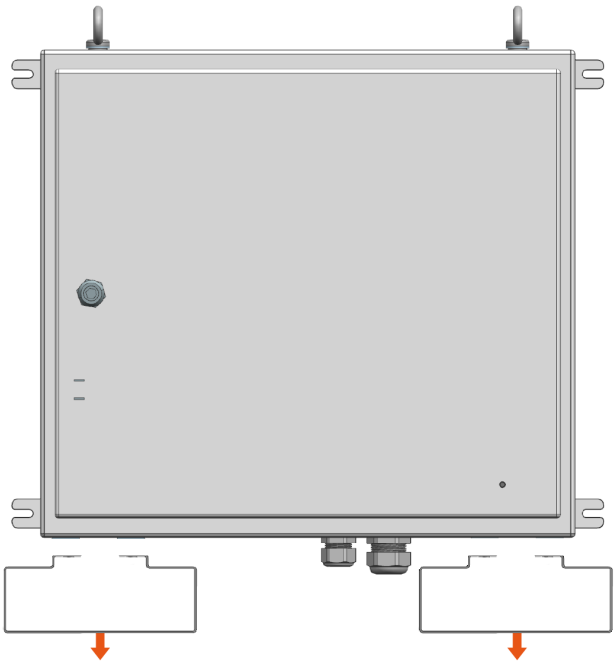

10. Remove the eye bolts and washers (optional). Use either an adjustable wrench or screwdriver's shaft to loosen the eye bolts.

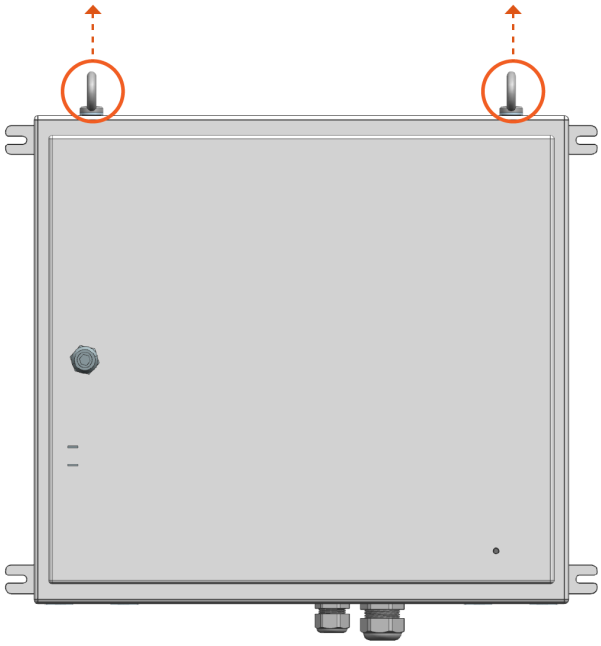

Connect Remaining Power Link 2000 Conduits

1. Open the Power Link 2000 door and engage the door stopper.
2. Connect remaining conduits to the top and bottom gland plates.

IMPORTANT:

- Use suitable fittings to secure and seal conduits to the enclosure. Conduits must be sealed to maintain a Pollution Degree 2 environment.
- Illustrations in this guide depict a sample conduit configuration at the bottom gland plate. Actual conduit quantity, size, and position at the gland plate will vary by site.

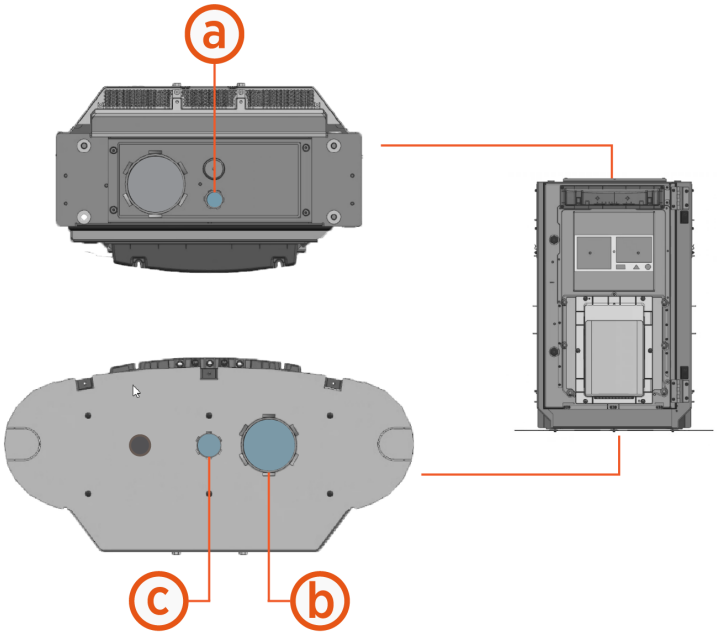

Conduit at top plate:

(a) LV output to PD Controller

Conduits (sample pattern) at bottom plate:

(b) HV DC input from Power Block

(c) LV DC input from Power Block

Open PD Controller

1. Quarter turn the door latch to unlock the door.

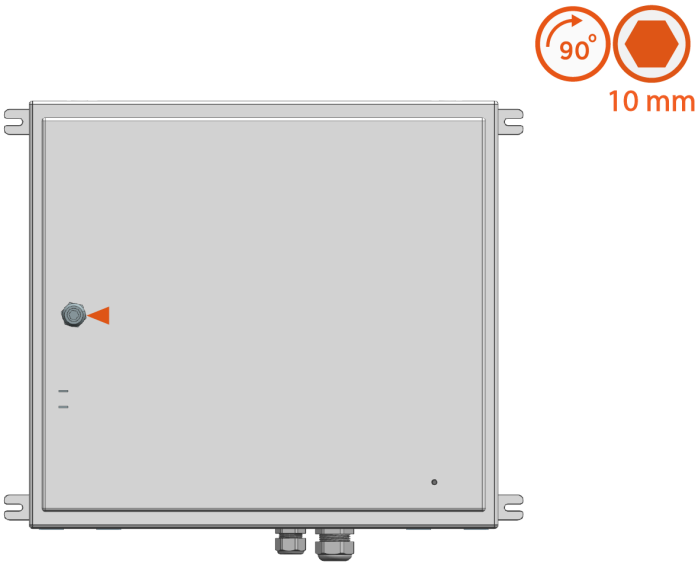

2. Open the enclosure.

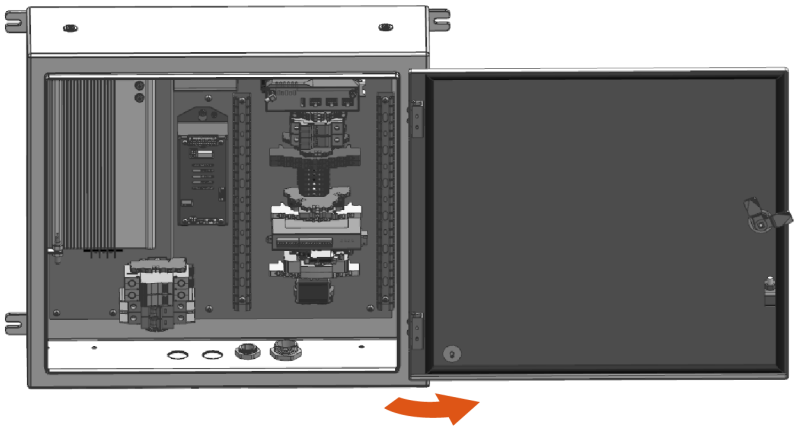

Connect PD Controller Conduits

1. Connect AC and LV input conduits to the bottom of enclosure.

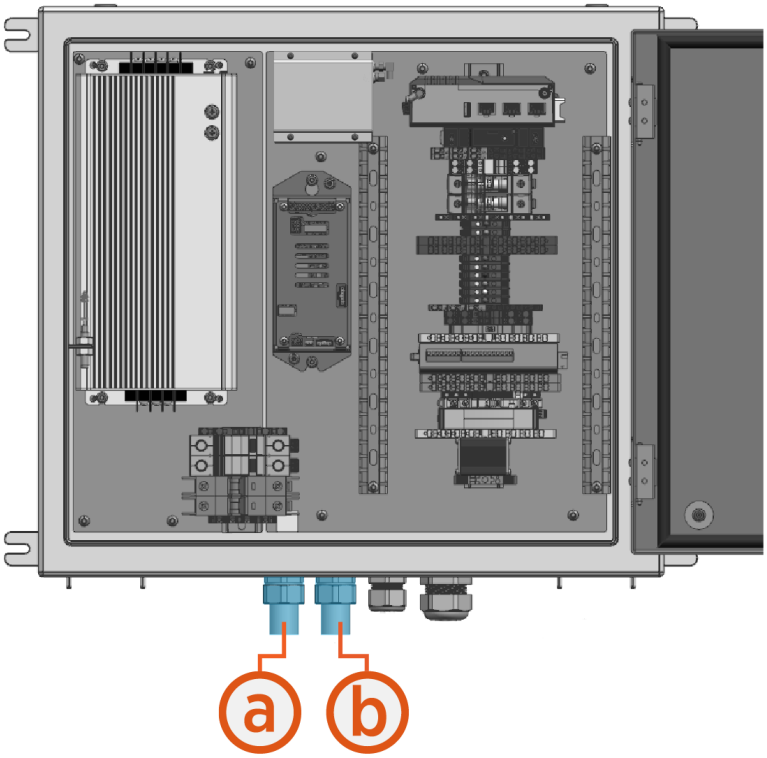

(a) AC input conduit

(b) LV input conduit

Connect Power Link 2000 Wires 6

WARNING: Do not install or service the charging station in inclement weather. If you work in snow, rain, or wind, you must use a weather-proof shelter that covers all boxes and components.

IMPORTANT: Ensure that the installation complies with all applicable codes and ordinances.

IMPORTANT: Keep components out of direct sunlight in a cool area until you install them.

CAUTION: Warranty Limitation

- If the charging station is not installed, commissioned, or serviced by a ChargePoint certified technician using a ChargePoint-approved method, it is *excluded* from all ChargePoint and other warranties and ChargePoint is not responsible.
- You must be a licensed electrician and complete training at chargepoint.com/installers to become ChargePoint certified and to access ChargePoint's web-based installer tools or ChargePoint Installer app.

CAUTION: Use low torque settings when working with power tools during installation or servicing. Over-torquing can damage the equipment.

CAUTION: While installing fasteners inside enclosures, make sure not to drop the fasteners inside conduit openings. You may use conduit caps or covers to temporarily cover the conduit openings.

Parts Needed

To prepare for connecting Power Link 2000 wires, find the following part from the Mast Components Kit:

- Power Link 2000 to PD Controller LV DC wire assembly

Wiring Overview

In the Pantograph Down 2000 system, the Power Link 2000 has wiring connections to the pantograph, PD Controller, and to Power Block and/or other Power Link 2000s. Before pulling and connecting wires at the Power Link 2000, study and understand the wiring information provided below. For wire quantities, sizes, and terminations, see Wires and Terminations Required for Site and refer to the site drawing.

Output to Pantograph, PD Controller, and Mast

The mast-mount Power Link 2000 provides HV DC output to the pantograph and LV DC output (including chassis ground) to the PD Controller. There is also a ground connection between the Power Link 2000 and the Pantograph Down Mast. These wires and cables land within the Power Link 2000 at the locations shown below.

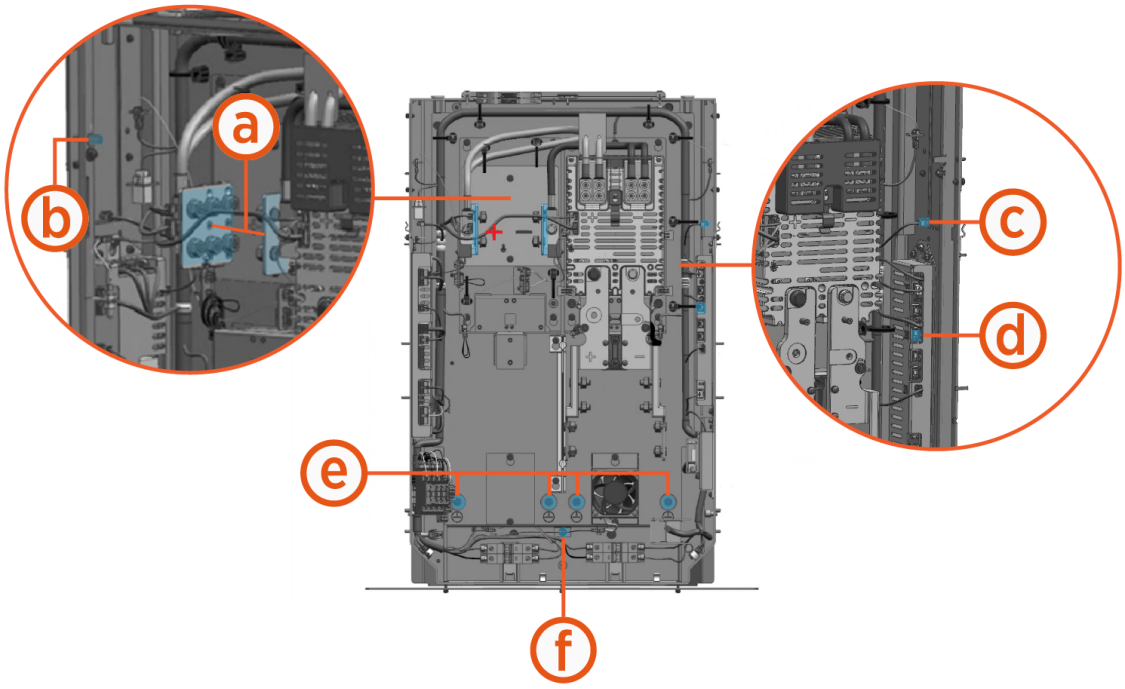

(a) HV DC output to pantograph

(b) High power ground to pantograph

(c) LV DC output to PD Controller

(d) Ethernet to PD Controller

(e) Ground to mast (shared with high power ground)

(f) Chassis ground to PD Controller

Note:

- The ground wire connecting Power Link 2000 and the Pantograph Down Mast may land at any of the ground studs **(e)**. These are the same landing locations for input high power ground wires.
- A Power Link 2000 to PD Controller LV DC wire assembly is provided in the Mast Components Kit.
- The ground wire connecting between the Power Link 2000 and the Pantograph Down Mast exits the Power Link 2000 enclosure via cable gland (supplied by site).

HV DC Wires From Power Block or Power Link 2000

The mast-mount Power Link 2000 has a single HV DC power path, designated Power Path B, which accepts connection from Power Block outputs and/or can be connected to the power path of other Power Link 2000s.

IMPORTANT: Each Power Block has two HV DC power outputs, Output A and Output B. Although the Power Link 2000 power paths and Power Block outputs are similarly named, it does not mean Output B of a Power Block must connect to Power Path B of a Power Link 2000. Power Path B of the mast-mount Power Link 2000 may receive power from either Output A or Output B of a Power Block. The A and B designations serve only to identify separate power paths and outputs in each product.

Consult the site single line diagram carefully to understand the Power Block/Power Link 2000 interconnections specific for your site.

Wires connecting to the Power Link 2000 power path land within the interior of the Power Link 2000 enclosure at the terminals shown below. The power path has a set of upper landings and a set of lower landings.

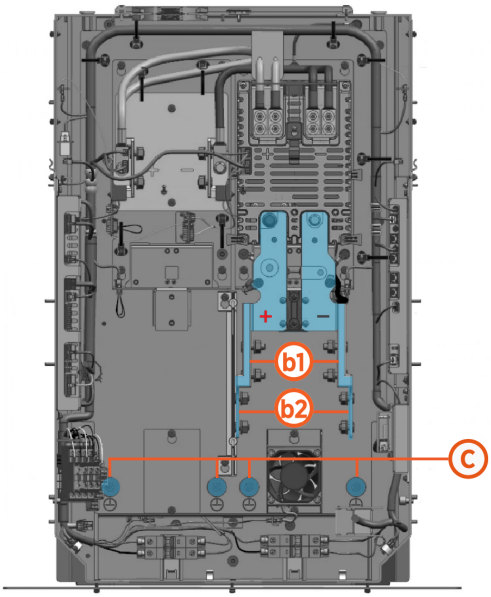

(b1) Power Path B, upper landing

(b2) Power Path B, lower landing

(c) High power ground (shared with ground to mast)

Note: There are four high power ground studs **(c)**. These are the same locations for landing the ground wire that connects from the Power Link 2000 to the Pantograph Down Mast. In some architectures, a Power Link 2000 may need to accept more ground wires than the number of landing studs. In these cases, two ground wires may stack onto a single stud.

LV DC From Power Block or Power Link 2000

Each Power Link 2000 has two LV DC input ports and two LV DC output ports for connection to Power Blocks and/or other Power Link 2000s. Power Link 2000 also has three Ethernet ports for connection with Power Blocks and/or other Power Link 2000s. At minimum, each Power Link 2000 has one LV DC input and one Ethernet connection to a Power Block or Power Link 2000. Consult the site drawing. Note that Ethernet cables typically share conduit with LV DC connections coming from the same Power Block or Power Link 2000.

LV DC wires and Ethernet cables associated with these types of connections land within the interior of the Power Link 2000 enclosure at the terminals shown below.

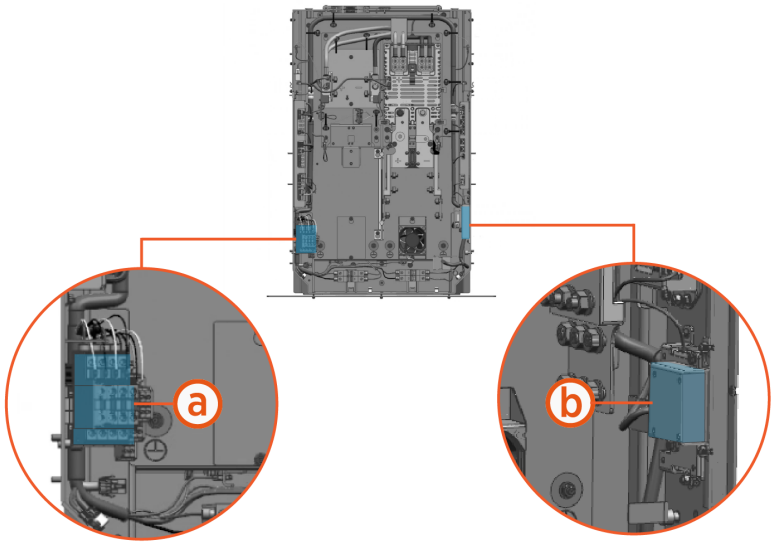

(a) LV DC input/output

(b) Ethernet

Pull, Cut, and Connect Wires

HV DC Output to Pantograph Wires

1. At the 3-1/2 in conduit at the top of the Power Link 2000, pull the HV DC wires into the enclosure.
2. Perform insulation resistance test on the HV DC wires. Refer to the *Express Plus High Voltage Wire Insulation Resistance Test Field Guide*.

3. Connect the HV DC wires. See Wiring Overview for landing locations. See How To Connect HV DC Wires and How to Connect High Power Ground Wires.

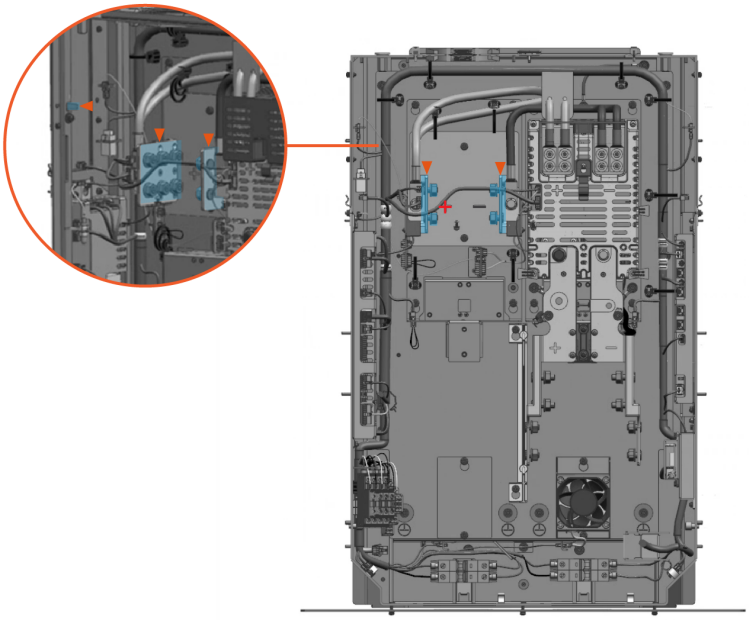

How to connect HV DC wires

Follow the procedure below for each HV DC wire.

IMPORTANT: Before you begin, make note of the following:

- Make sure no wire material is exposed below the lug barrel. If necessary, heat shrink or tape the exposed area to meet the local code requirements.
- Wipe off any remains of wire pulling lubricant if applied.

1. Prepare the wire:

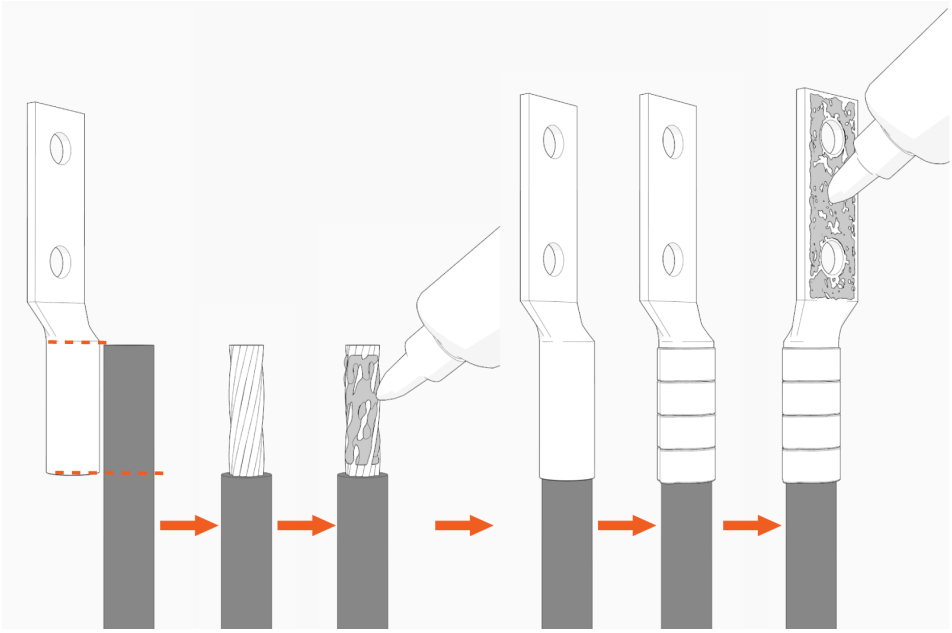

   a. Mark the lug's barrel height on the wire terminal.
   b. Strip the jacket on the marked terminal. Use a suitable wire stripper, such as Klein tool.
   c. If recommended by the wire manufacturer or local code, apply an anti-oxidant joint compound to the stripped wire material to make a gastight joint with the lug.
   d. Insert the stripped terminal into the lug's barrel and crimp it. Use a suitable lug crimping tool and/or die recommended by the lug manufacturer.
   e. Apply dielectric grease to the lug's tongue surface that comes in contact with the bus bars.

2. Remove lug nuts from the landing studs.

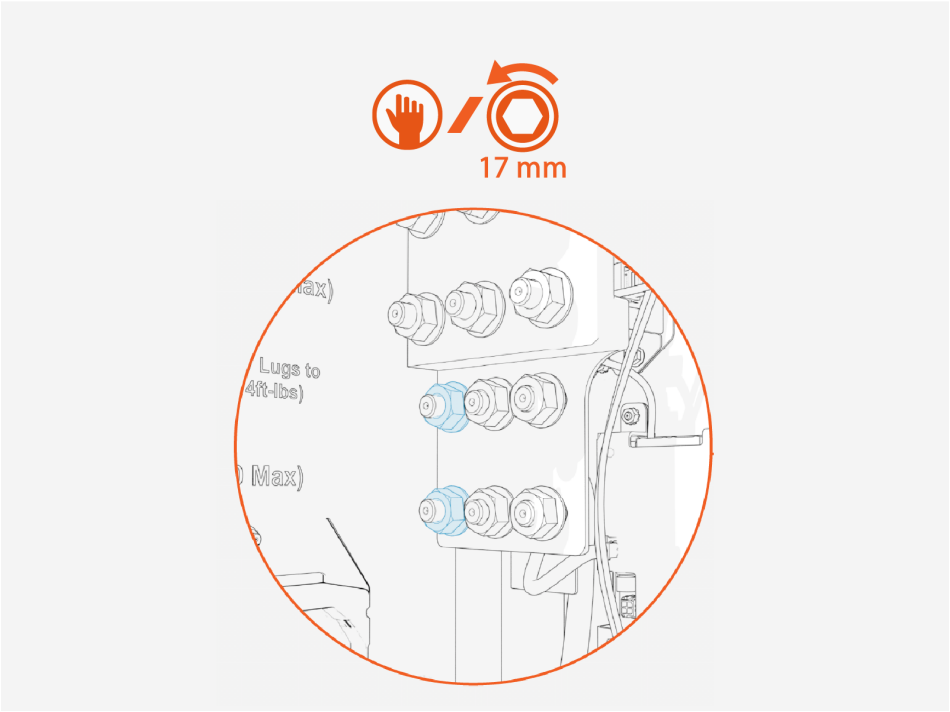

3. Install the prepared wire onto the studs.

IMPORTANT: When connecting the HV DC wires, install the red (+) wire's lug onto the bus bar's positive (+) pole and black (-) wires onto the bus bar's negative (-) pole.

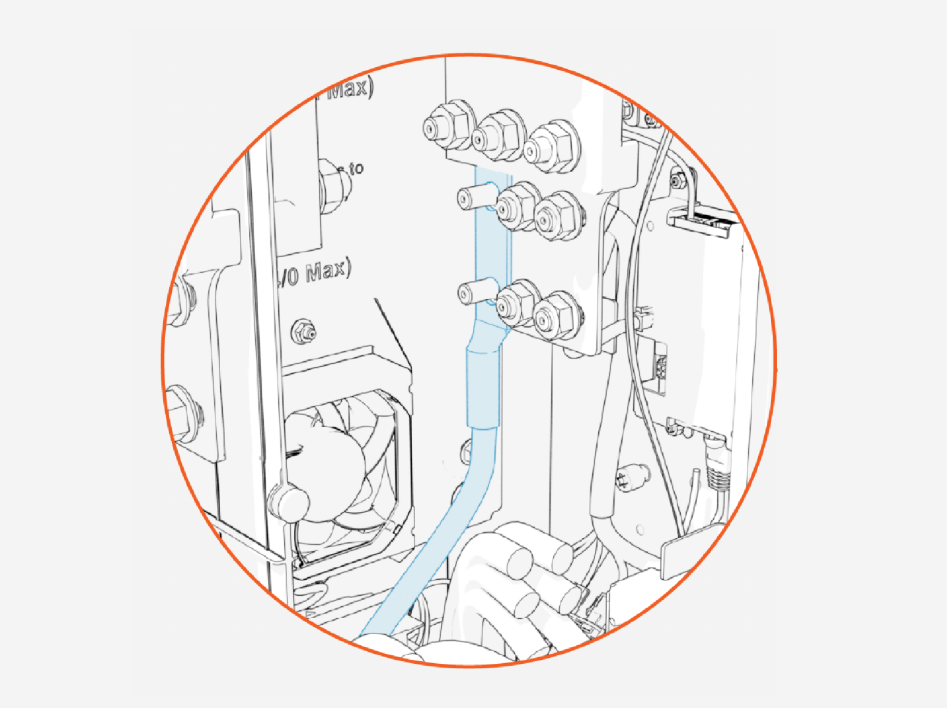

4. Reinstall and tighten the lug nuts.

IMPORTANT: Torque the HV DC wire lug nuts to **19 Nm (14 ft-lb)**.

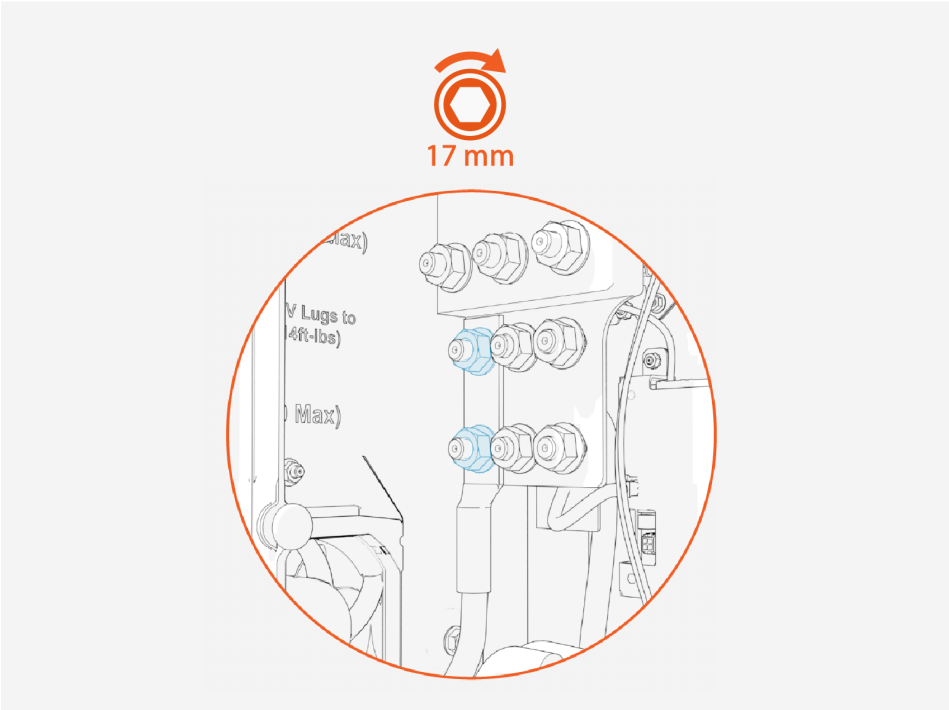

5. Apply torque marks. Torque marks are required to pass post-installation inspection.

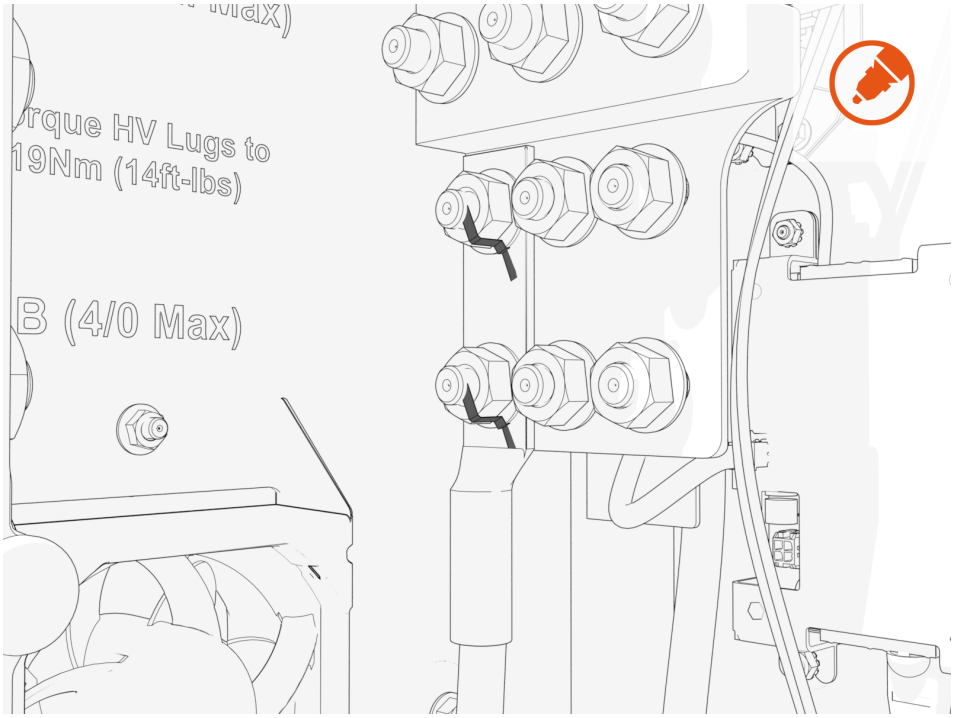

How to connect high power ground wires

Follow the procedure below for each ground wire.

IMPORTANT: Before you begin, make note of the following:

- Make sure no wire material is exposed below the lug barrel. If necessary, heat shrink or tape the exposed area to meet the local code requirements.
- Wipe off any remains of wire pulling lubricant if applied.

1. Prepare the wire:

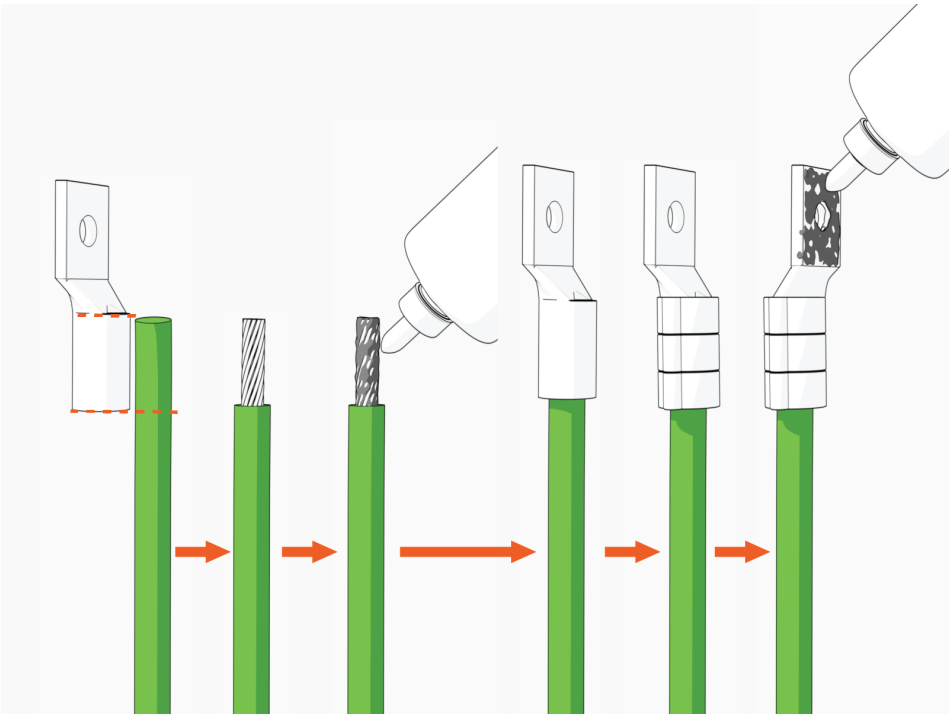

   a. Mark the lug's barrel height on the wire terminal.
   b. Strip the jacket on the marked terminal. Use a suitable wire stripper, such as Klein tool.
   c. If recommended by the wire manufacturer or local code, apply an anti-oxidant joint compound to the stripped wire material to make a gastight joint with the lug.
   d. Insert the stripped terminal into the lug's barrel and crimp it. Use a suitable lug crimping tool and/or die recommended by the lug manufacturer.
   e. Apply dielectric grease to the lug's tongue surface that comes in contact with the bus bars.

2. Remove lug nut from the ground stud.

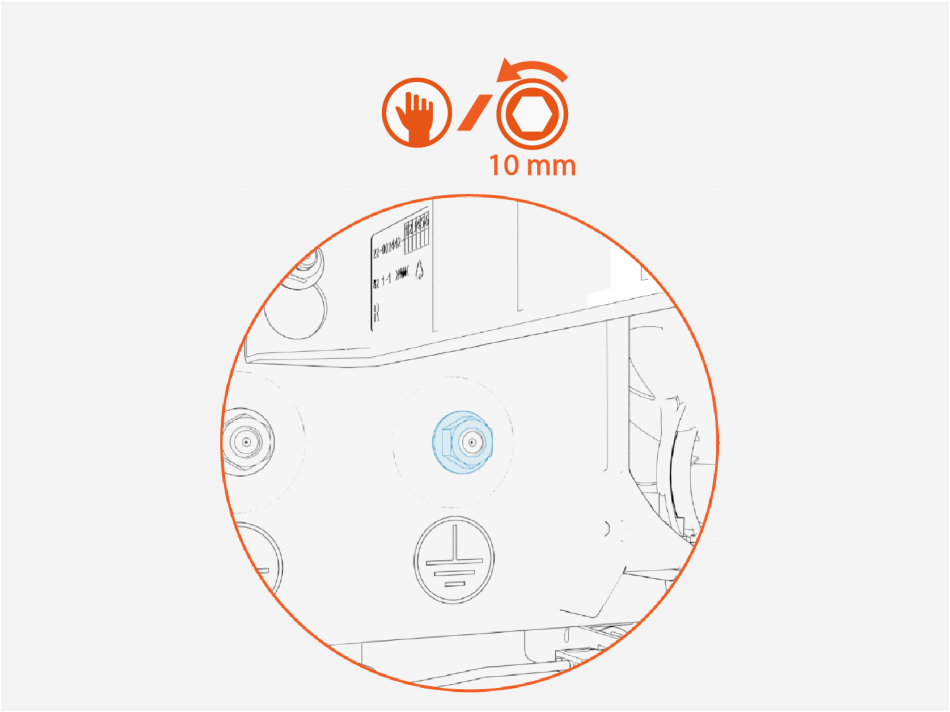

3. Install the prepared wire onto the stud.

   Note: If needed, two ground wires may stack onto a single stud.

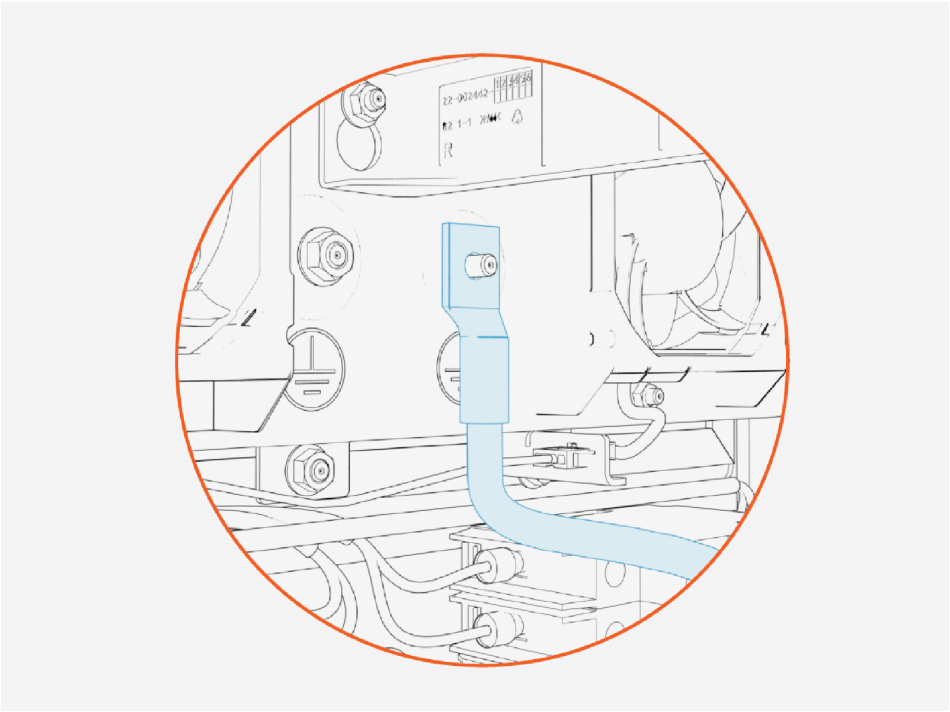

4. Reinstall and tighten the lug nut.

IMPORTANT: Torque the ground wire lug nuts to **5.6 Nm (50 in-lb)**.

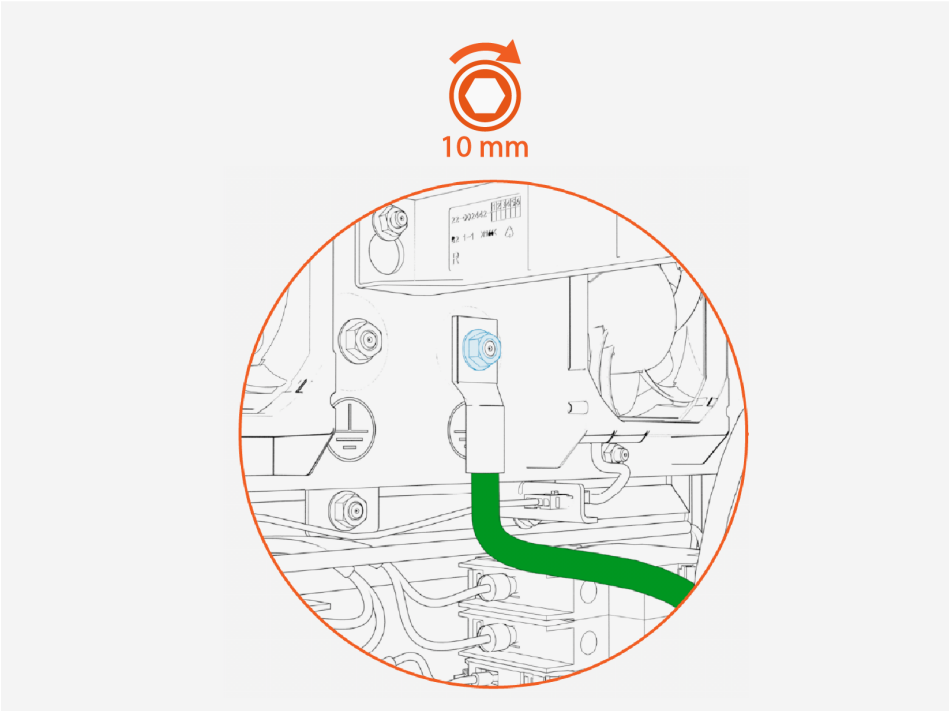

HV DC Wires From Power Block or Power Link 2000

1. Label the HV DC and high power ground wires at both ends to allow for wiring to be traced during installation and future servicing.
2. Pull the wires through conduit into the enclosure. If necessary, apply a non-conductive wire pulling lubricant.
3. Perform insulation resistance test on the HV DC wires. Refer to the *Express Plus High Voltage Wire Insulation Resistance Test Field Guide*.
4. Cut the wires to length for landing on their respective terminals. See Wiring Overview for landing locations. Take into account the length of the lug that will terminate each wire.

5. Connect the HV DC wires. See How To Connect HV DC Wires and How to Connect High Power Ground Wires.

IMPORTANT: Connect wires in the following order:

a. Ground wires
b. Lower landing wires
c. Upper landing wires

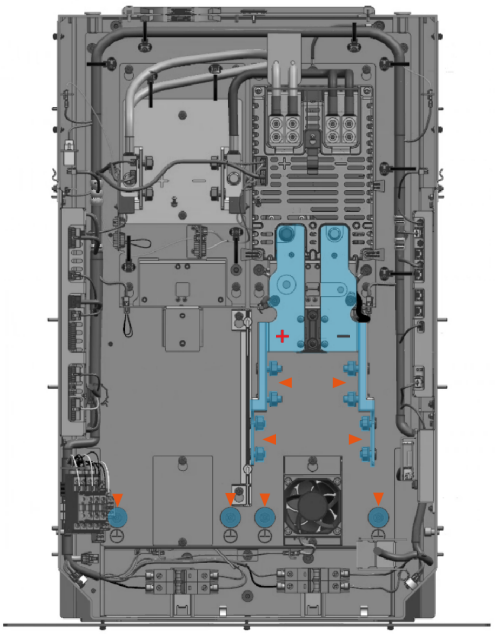

LV DC Wires From Power Block or Power Link 2000

1. Label the LV DC and Ethernet wires at both ends to allow for wiring to be traced during installation and future servicing.
2. Pull the LV DC and Ethernet wires into the enclosure.
3. Connect the LV DC wires. See:
   - How to Connect LV DC Wires From Power Block or Power Link 2000
   - How to Connect Ethernet Cables From Power Block or Power Link 2000

How to Connect LV DC Wires From Power Block or Power Link 2000

Follow the procedure below for each LV DC wire pair.

1. Identify the target wire insertion points for landing the LV DC input wire pair.

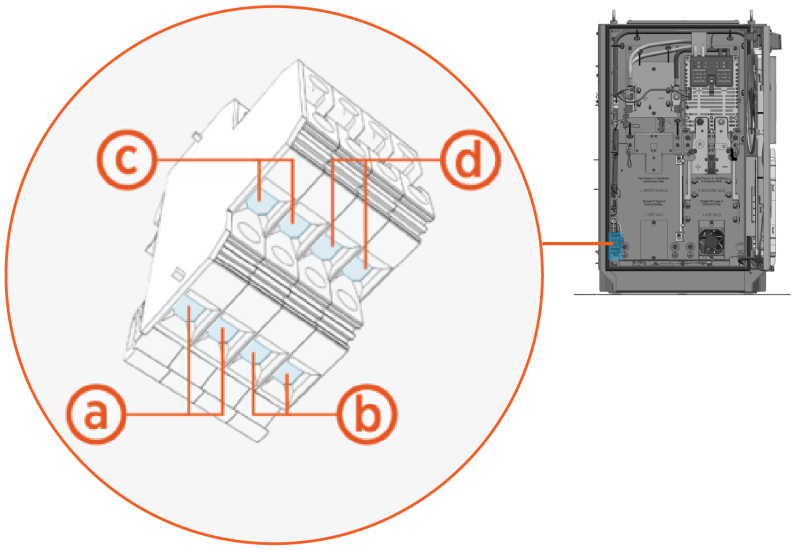

(a) Input, primary
(b) Input, secondary
(c) Output, primary
(d) Output, secondary

2. Cut wires to length for landing at the terminal.
3. Strip the wire jackets.

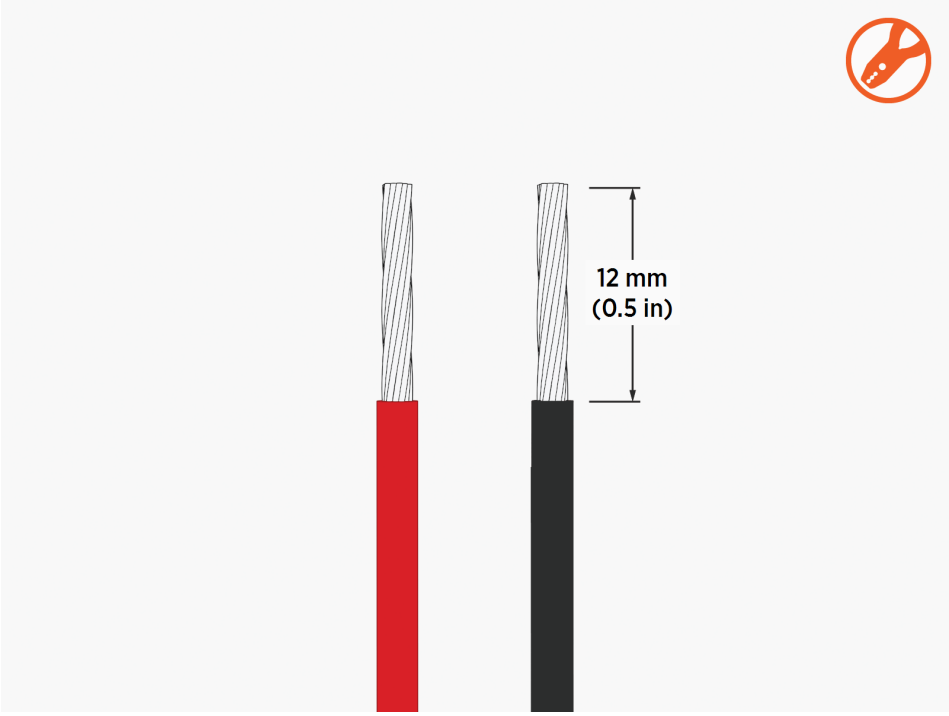

4. Loosen the wire set screws (x2).

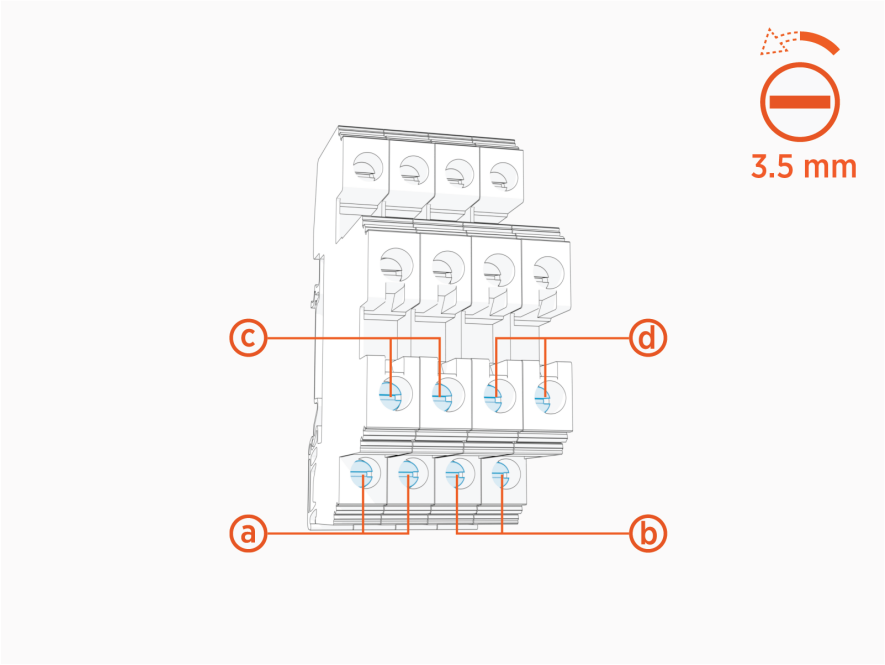

(a) Input, primary
(b) Input, secondary
(c) Output, primary
(d) Output, secondary

5. Route wires (x2) through the wireway clamps (if necessary use cable ties) and insert them into the LV terminal block.

IMPORTANT: For each wire pair, insert the positive (+) wire into the left terminal. Insert the negative (-) wire into the right terminal.

6. Torque the screws (x2) to **1.5 Nm (13.3 in-lb)**. Push-pull to test that both wires (+ and -) are secured.

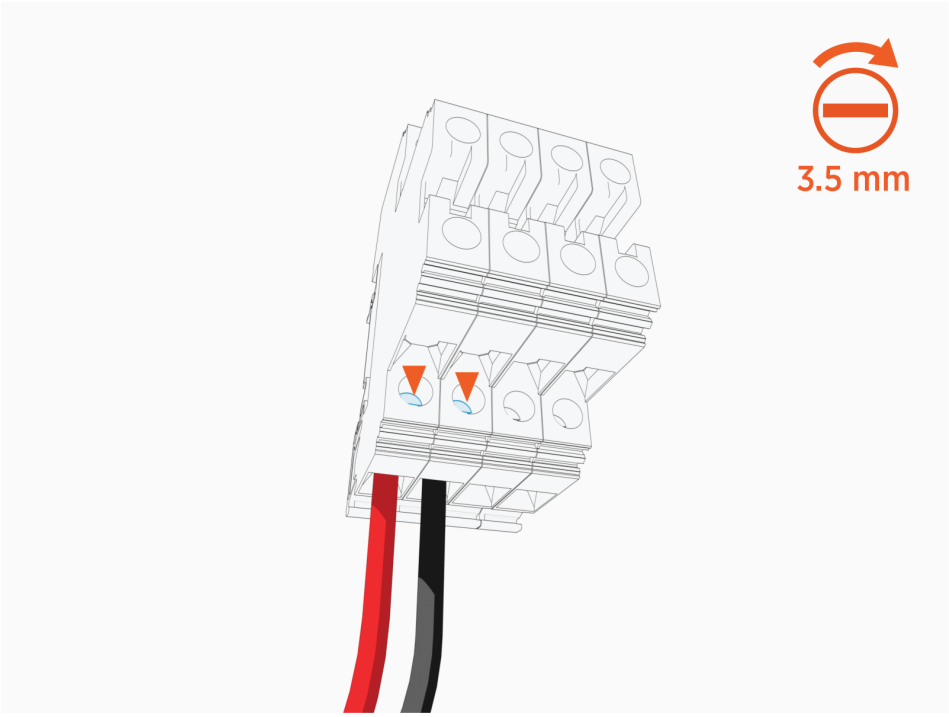

How to connect Ethernet cable from Power Block or Power Link 2000

Follow the procedure below for each Ethernet cable.

1. On the Smart Ethernet Switch, locate three ports for landing Ethernet cables.
   Note: Cables may plug into any available port.

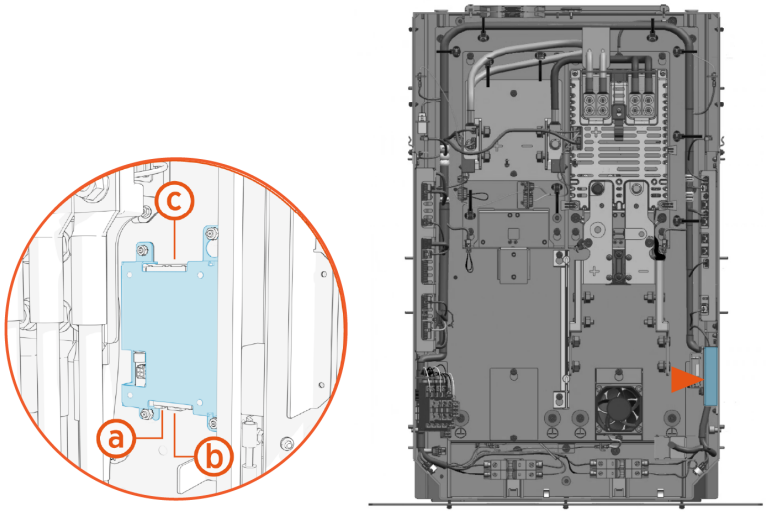

(a) Lower left port
(b) Lower right port
(c) Upper port

2. Trim Ethernet (Cat6 STP) cable terminal to length, allowing for a service loop.

3. Field crimp a shielded RJ45 connector onto the Ethernet cable. Use straight-through T568B pattern.

IMPORTANT:

- For an Ethernet cable connecting from Power Block to Power Link 2000, do not ground the shield at this end of the cable. Ground the shield at the end of the cable that connects to the Power Block.
- For an Ethernet cable connecting between Power Link 2000s, ground the shield at the cable end nearer to the Power Block (per Ethernet topology for the Express Plus cluster). Do not ground the shield at the other cable end.

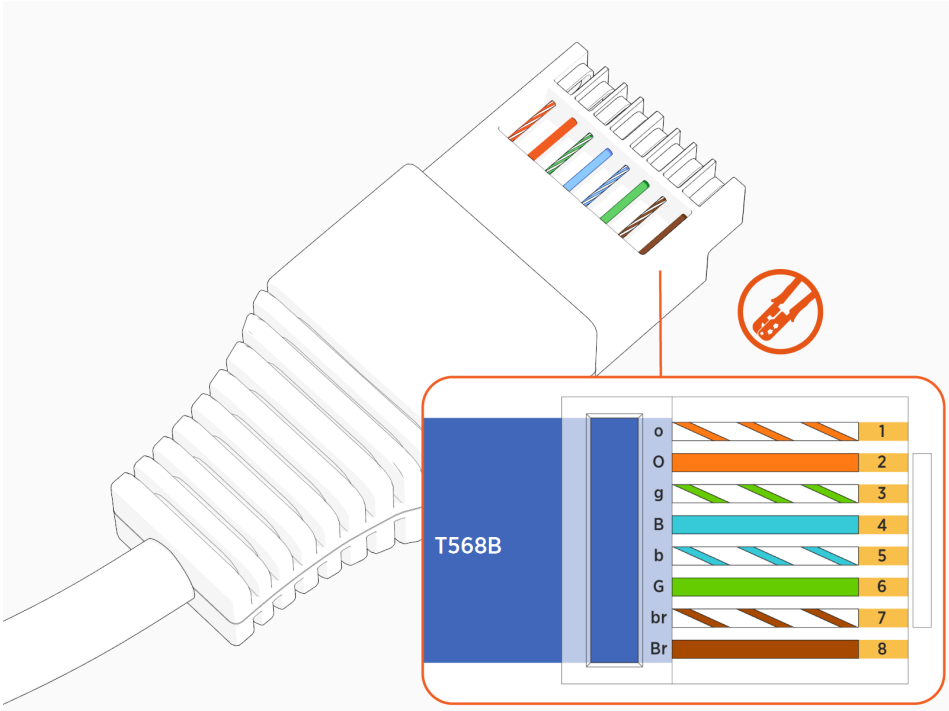

4. Test the Ethernet cable for functionality.

IMPORTANT: If using a Paige OSP Shielded GameChanger cable for a wire run length greater than 100 m (328 ft), follow the test procedure specified by Paige. See Paige GameChanger Resources.

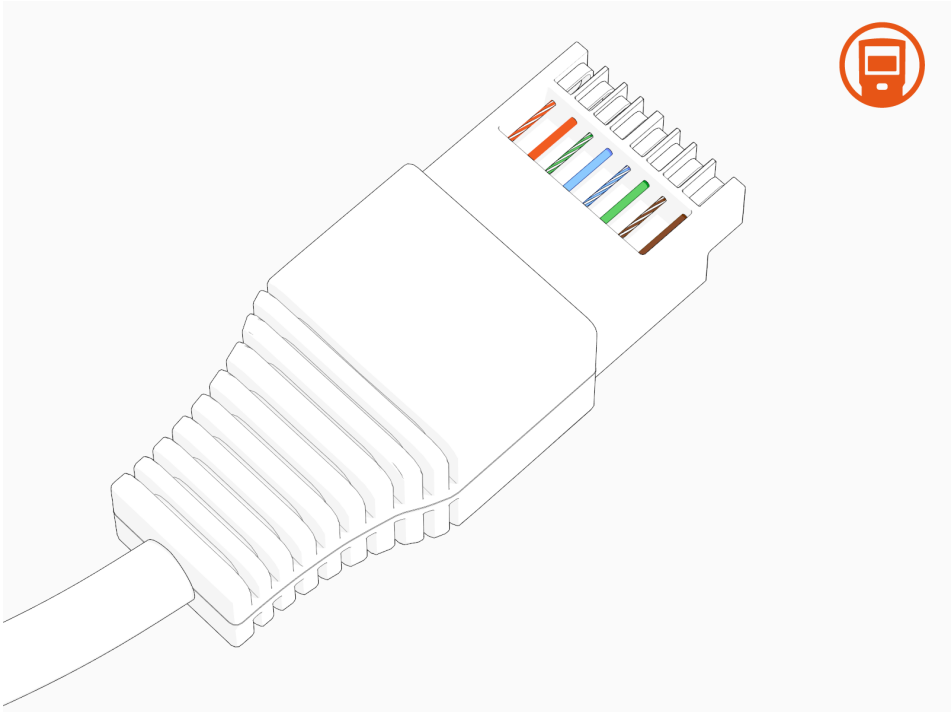

5. Route the cable through the wireway clamps and connect the cable at the Smart Ethernet Switch.

   Note: To establish a secure connection, the RJ45 connector latch must click into the Smart Ethernet Switch port.

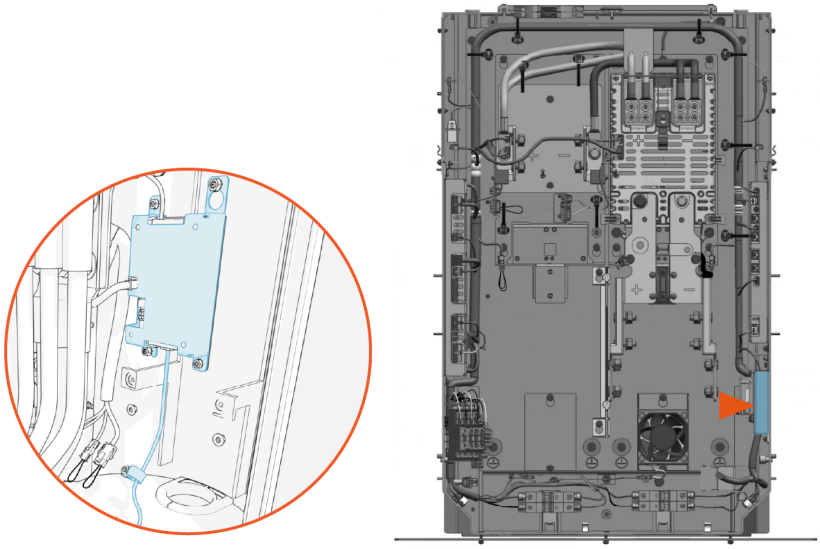

LV Output to PD Controller

1. Familiarize yourself with the Power Link 2000 to PD Controller LV DC wire assembly. Understand which end of the wire assembly lands at the Power Link 2000. See Power Link 2000 to PD Controller LV DC wire assembly.
2. Pull the LV DC wire assembly, Ethernet cable, and chassis ground wires through conduit.
3. Connect the LV DC wires and Ethernet Cables. See:
   - How to Connect LV DC Output to PD Controller Wires
   - How to Connect Chassis Ground to PD Controller Wire
   - How to Connect Ethernet Output to PD Controller Cable

How to connect LV DC output to PD Controller wire

1. Route the Power Link 2000 to PD Controller LV DC wire assembly (with female microfit connector) to the wire shown below (with male microfit connector). Route the wires along the wall of Power Link 2000 enclosure.

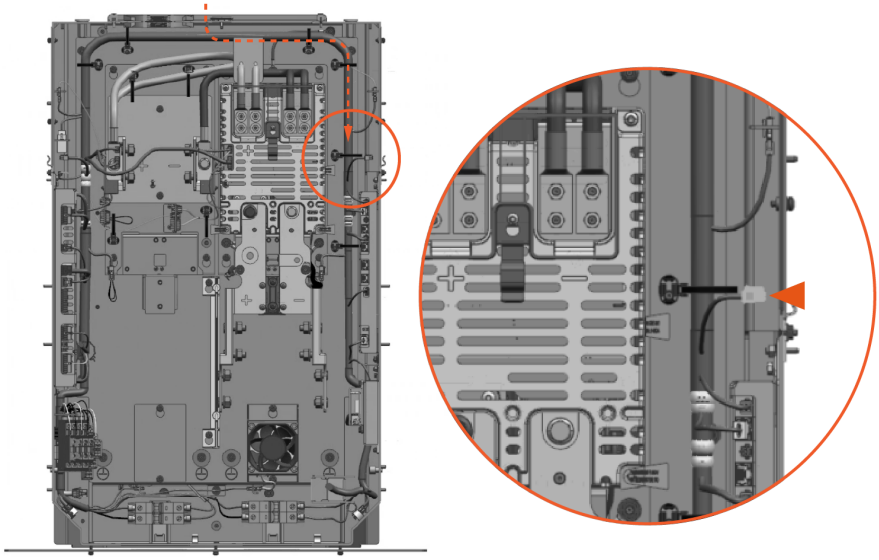

2. Connect the wires together. Make sure the microfit connectors snap together with an audible click.
3. To ensure the wires do not make contact with the HV DC bus bars, use zip-ties to secure the LV DC wire assembly to the main cable harness.

How to connect chassis ground to PD Controller wire

Follow the procedure below for the chassis ground wire.

1. Route the chassis ground wire to the chassis ground stud. Route the wires along the wall of Power Link 2000 enclosure.

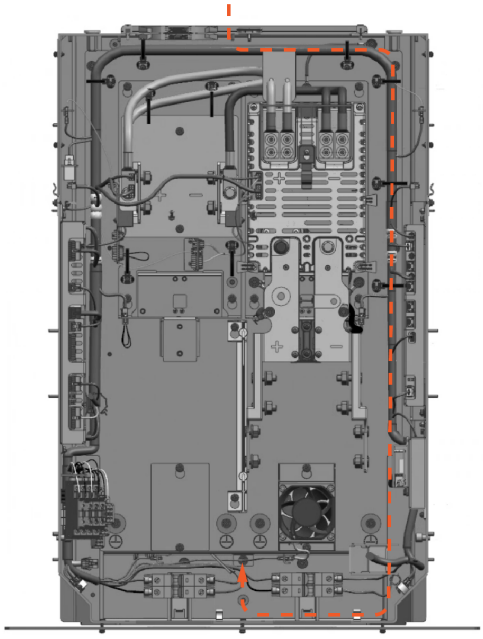

2. Cut wire to length for landing at the chassis ground stud. Take into account the length of the ring terminal that will terminate the wire.
3. Prepare the wire:
    a. Strip the ground wire for installation of a ring terminal.
    b. Crimp the ring terminal onto the wire end.

4. Remove the lug nut from the chassis ground stud.

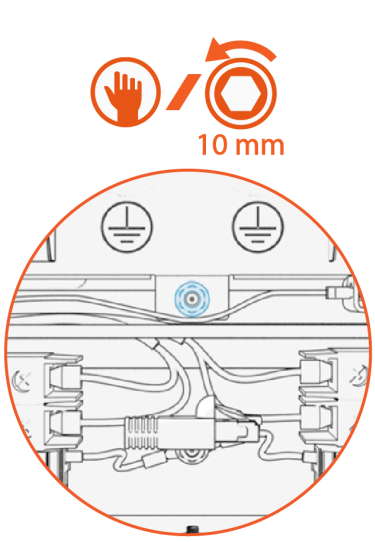

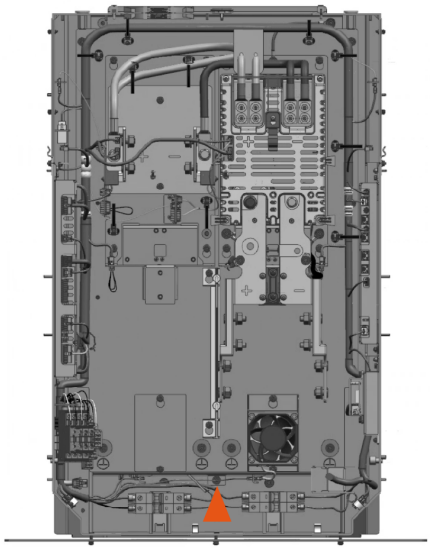

5. Install the prepared wire onto the stud.

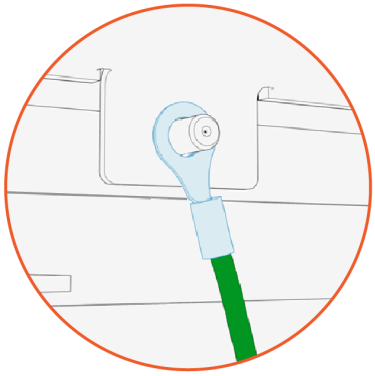

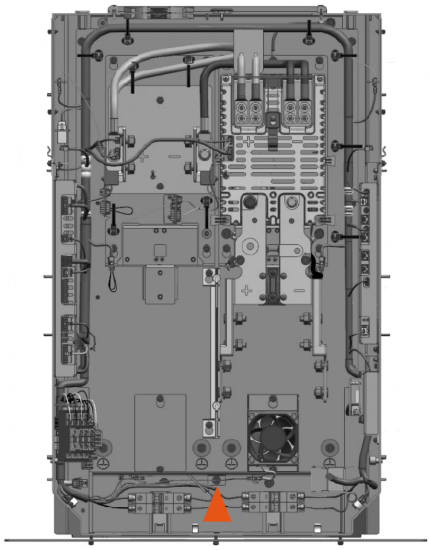

6. Reinstall the lug nut. Torque to **5.6 Nm (50 in-lb)**.

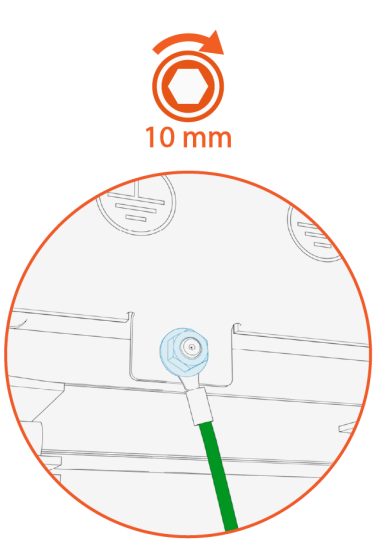

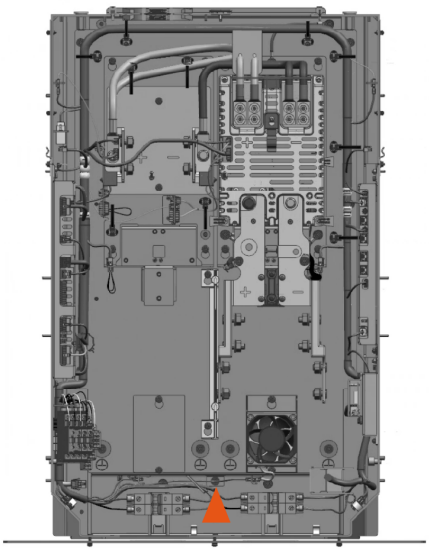

How to connect Ethernet output to PD Controller cable

1. Route the Ethernet cable to reach the Ethernet Switch (SSLAN). Keep the cable routed along the Power Link 2000 enclosure wall.

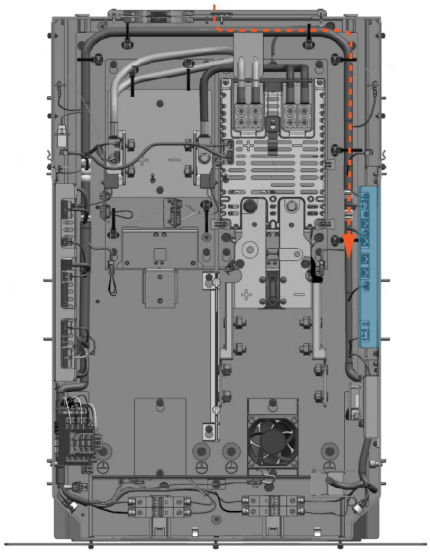

2. Trim Ethernet (Cat6 STP) cable terminal to length, allowing for a service loop.

3. Field crimp a shielded RJ45 connector onto the Ethernet cable. Use straight-through T568B pattern.

IMPORTANT: Ground the shield at this end of the Ethernet cable. Do not ground the shield at the end of the cable that connects to the PD Controller.

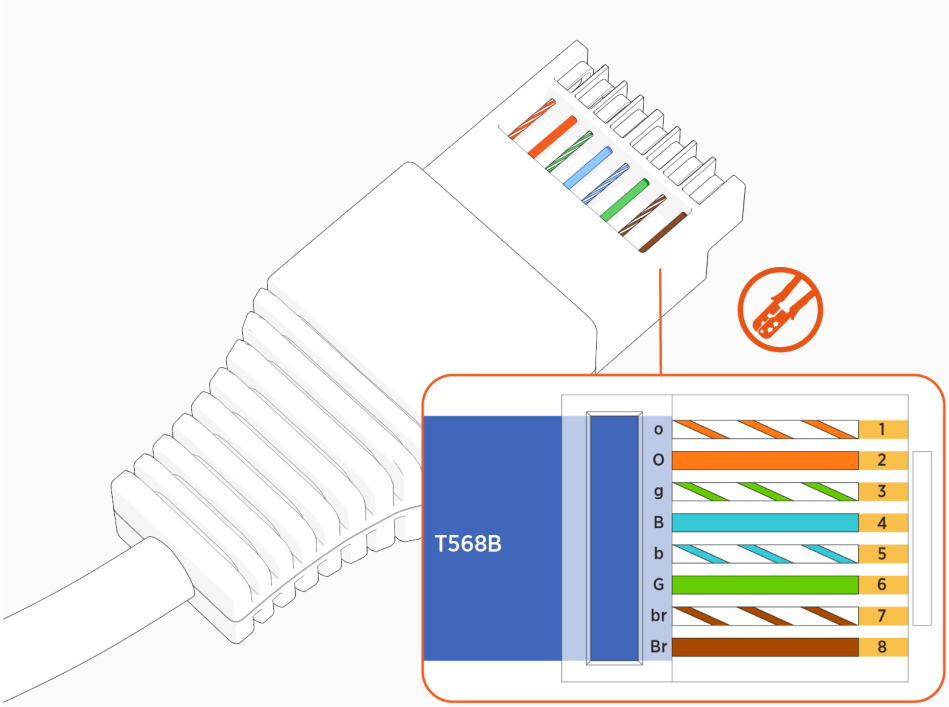

4. Test the Ethernet cable for functionality.

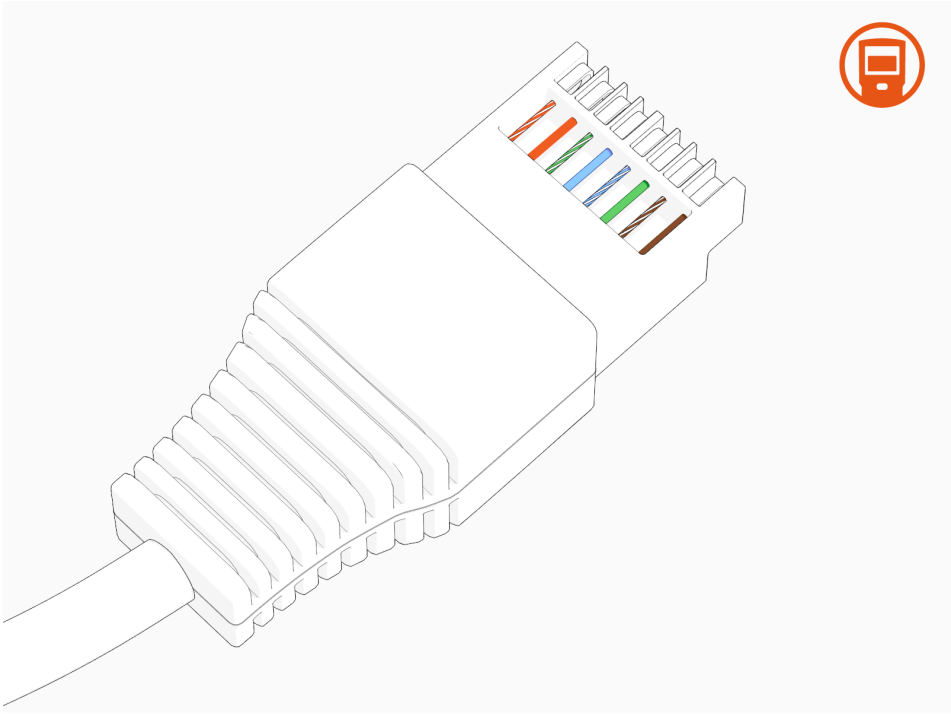

5. Connect the Ethernet cable to the Ethernet Switch (SSLAN). To establish a secure connection, the RJ45 connector latch must connect into the port with an audible click.

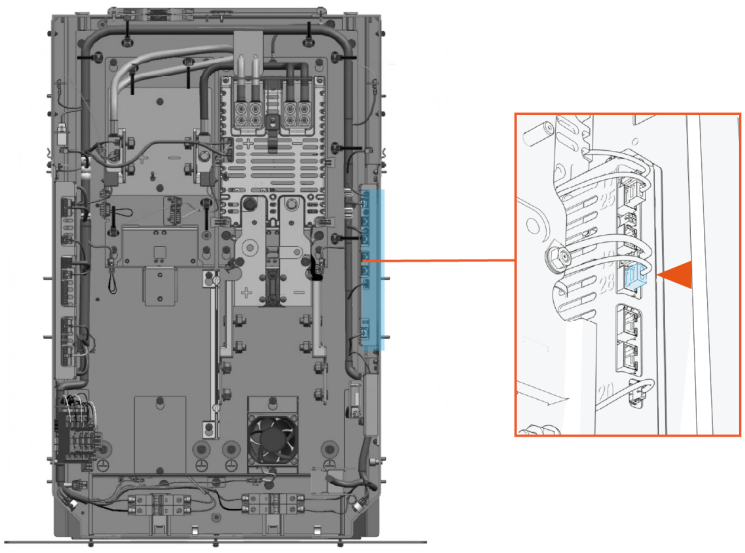

6. To ensure the cable does not make contact with the HV DC bus bars, use zip-ties to secure the Ethernet cable to the main cable harness.

Ground to Pantograph Down Mast

1. At the bottom gland plate, install a cable gland at the ground wire exit hole.
2. Route the ground wire through the gland and into the enclosure.
3. Connect the ground wire at any available ground stud. See Wiring Overview for landing locations. See How to Connect High Power Ground Wire for wire landing instructions.

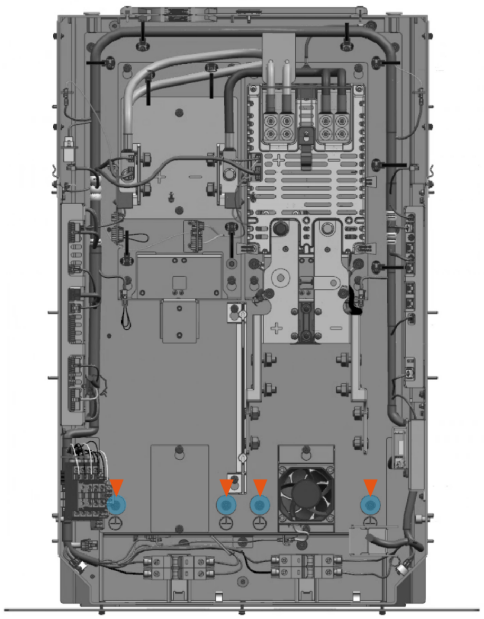

4. Tighten the cable gland.

Install Power Link 2000 Options 7

WARNING: Do not install or service the charging station in inclement weather. If you work in snow, rain, or wind, you must use a weather-proof shelter that covers all boxes and components.

IMPORTANT: Ensure that the installation complies with all applicable codes and ordinances.

IMPORTANT: Keep components out of direct sunlight in a cool area until you install them.

CAUTION: Warranty Limitation

- If the charging station is not installed, commissioned, or serviced by a ChargePoint certified technician using a ChargePoint-approved method, it is *excluded* from all ChargePoint and other warranties and ChargePoint is not responsible.
- You must be a licensed electrician and complete training at chargepoint.com/installers to become ChargePoint certified and to access ChargePoint's web-based installer tools or ChargePoint Installer app.

CAUTION: Use low torque settings when working with power tools during installation or servicing. Over-torquing can damage the equipment.

CAUTION: While installing fasteners inside enclosures, make sure not to drop the fasteners inside conduit openings. You may use conduit caps or covers to temporarily cover the conduit openings.

Ethernet to USB Kit

If the site plan indicates the Power Link 2000 must be configured with a hardwire Ethernet connection to a network server, follow procedures in this section to install the Ethernet to USB Kit and the hardwire connection.

1. Unpack the Ethernet to USB Kit. Confirm all parts listed below are present.

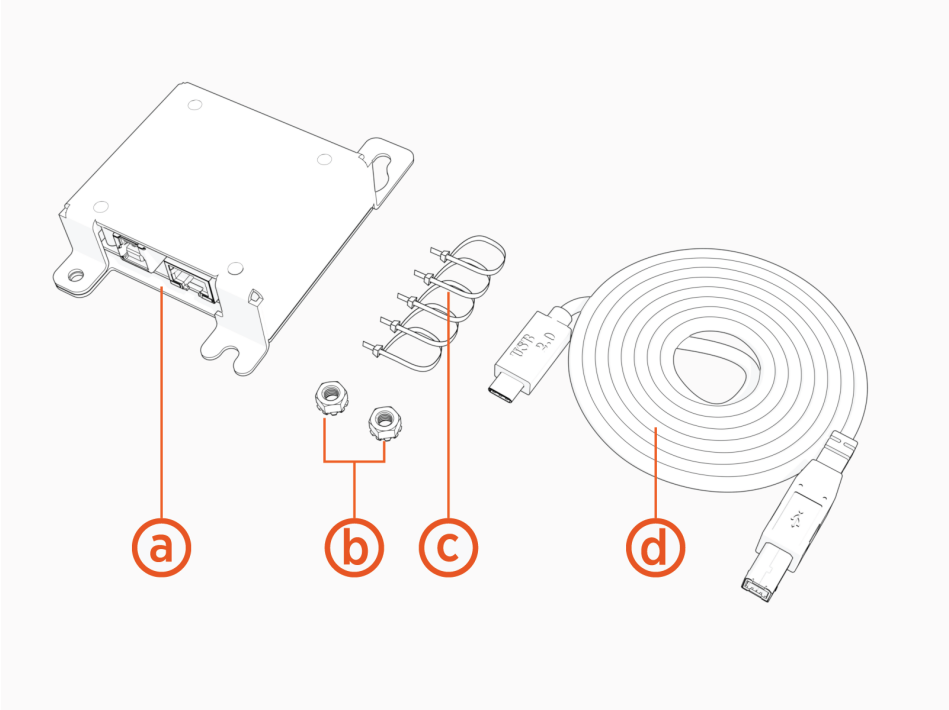

(a) Ethernet to USB module

(b) M5 star washer nuts (x2)

(c) Zip ties (x5)

(d) USB 3.0 Type B to Type C cable

2. Locate the mounting studs (x2).

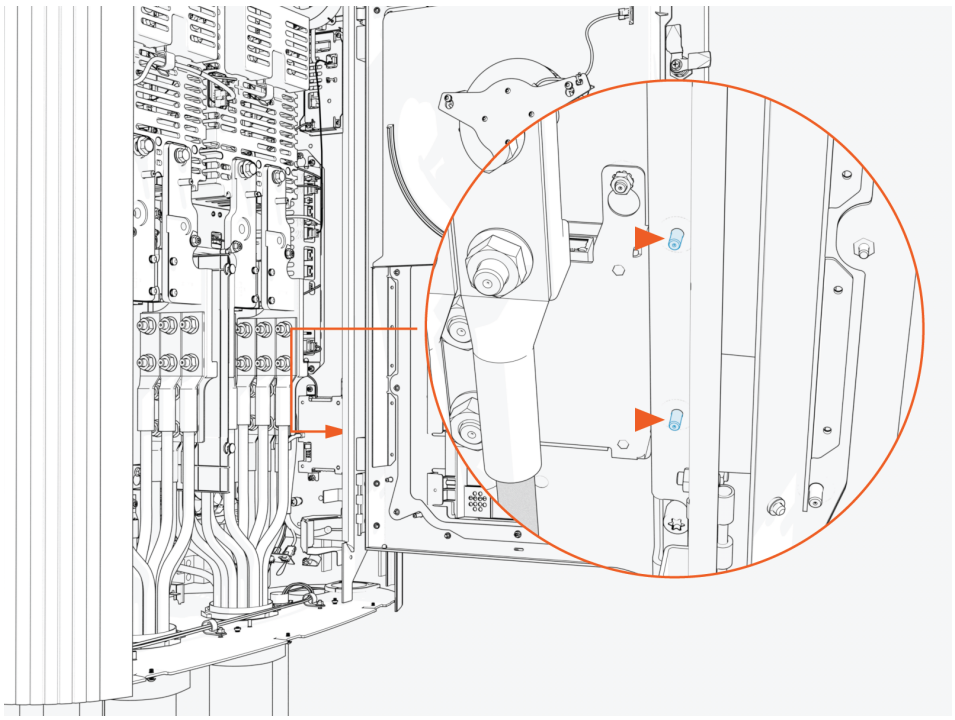

3. Install M5 star washer nuts (2) partially onto the studs. Thread the nuts only halfway onto each stud.

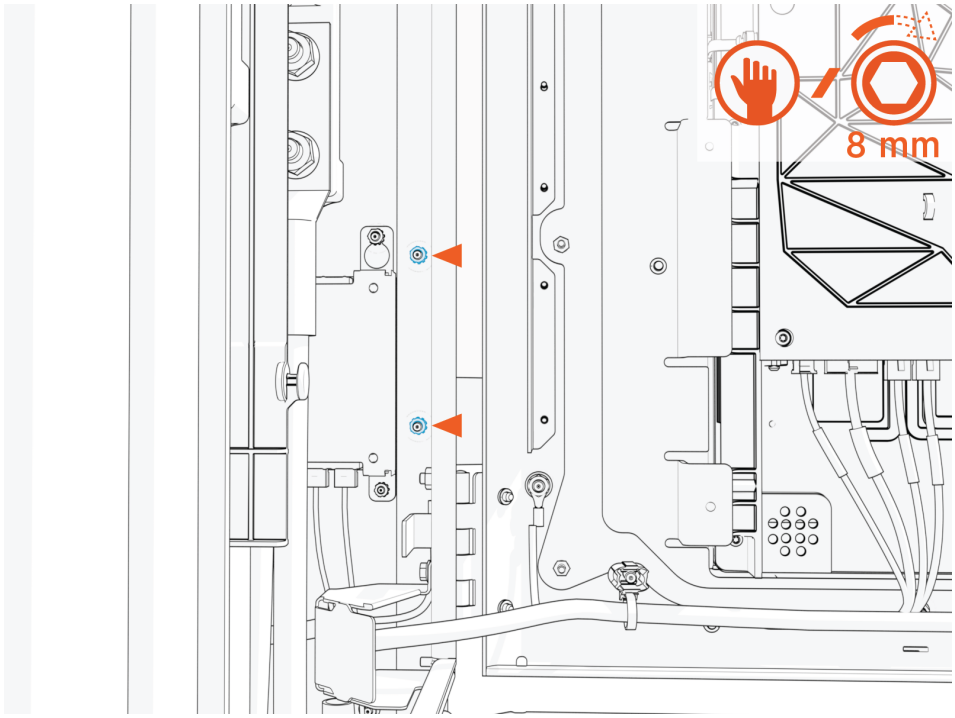

4. Mount the Ethernet to USB module onto the studs. Slide the module down to seat the notched tabs onto the studs.

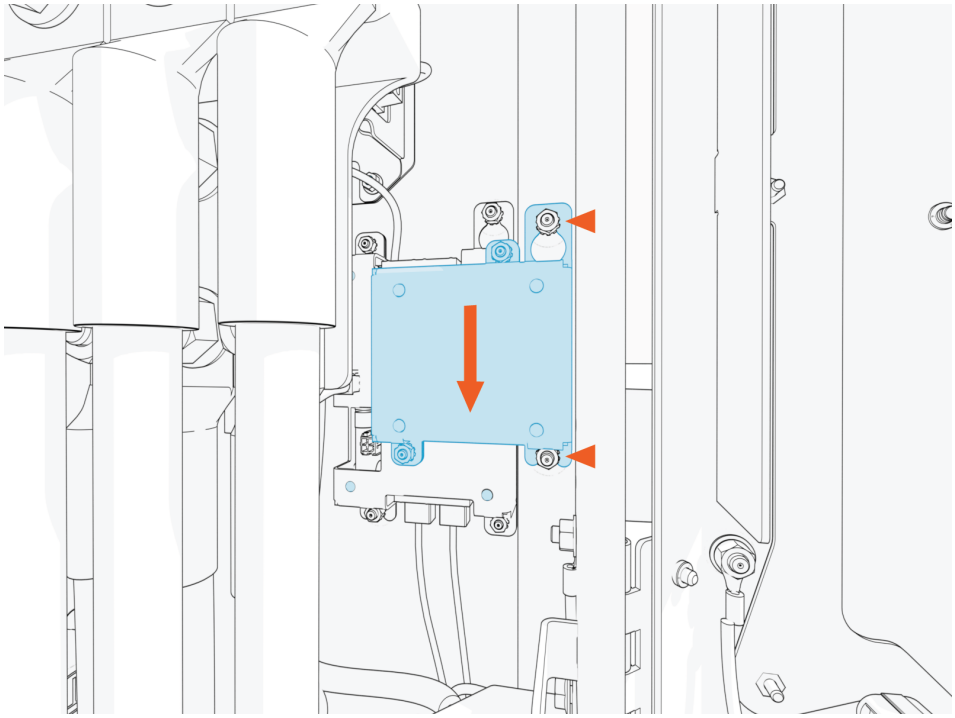

5. Torque nuts (x2) to **4.5 Nm (40 in-lb)**.

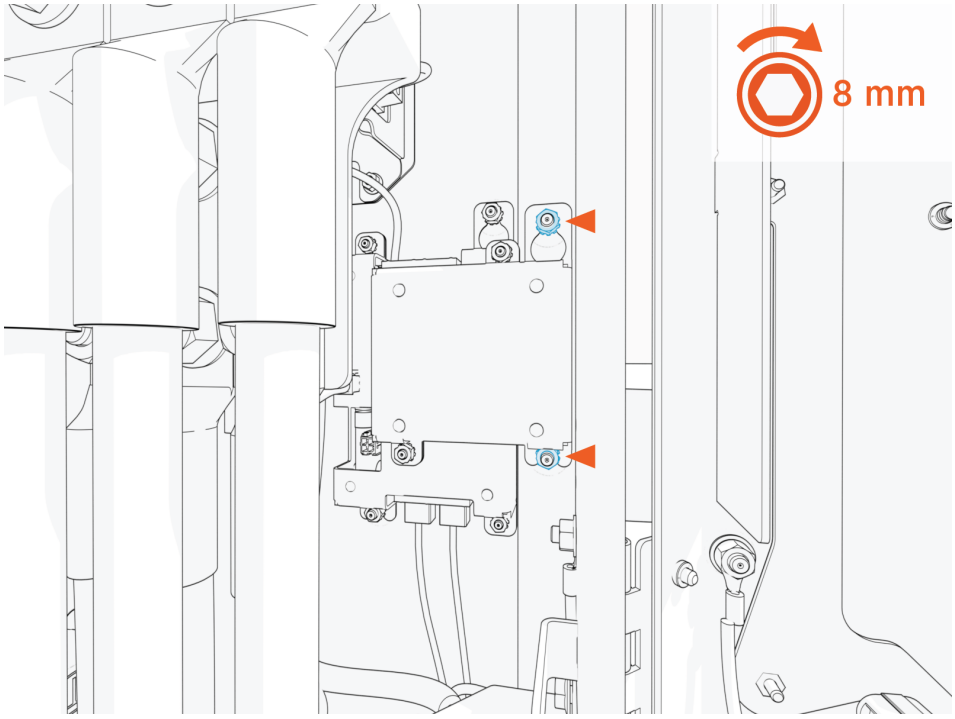

6. Plug the USB-B end of the USB cable into the module.

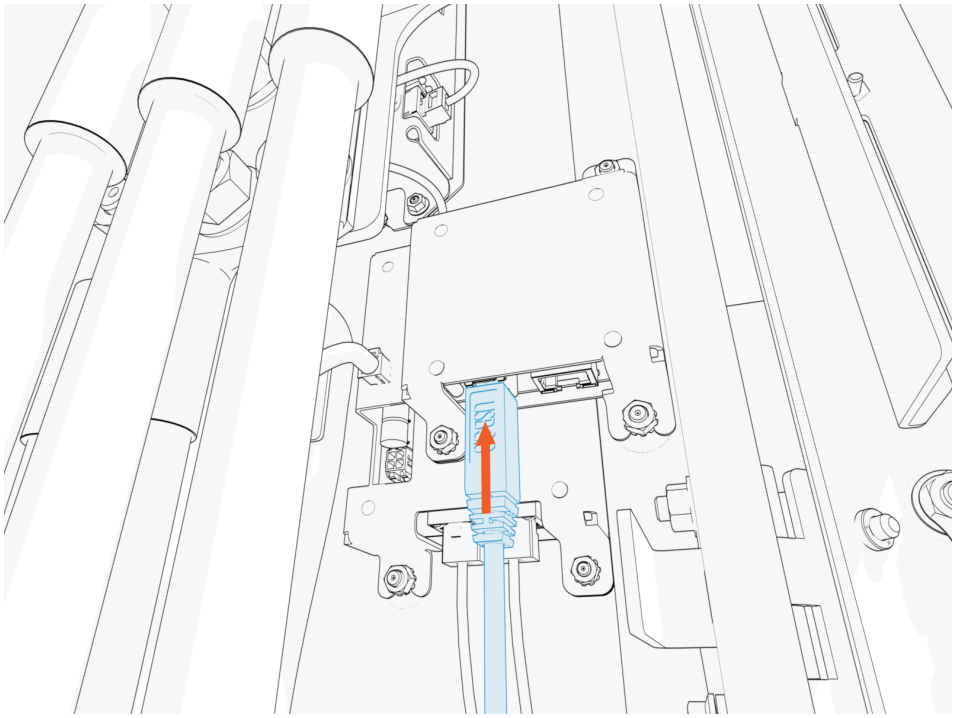

7. Route the cable through the door cable guide and along the main cable harness to the Control and Communication Module (CCOM) located on the Power Link 2000 door.

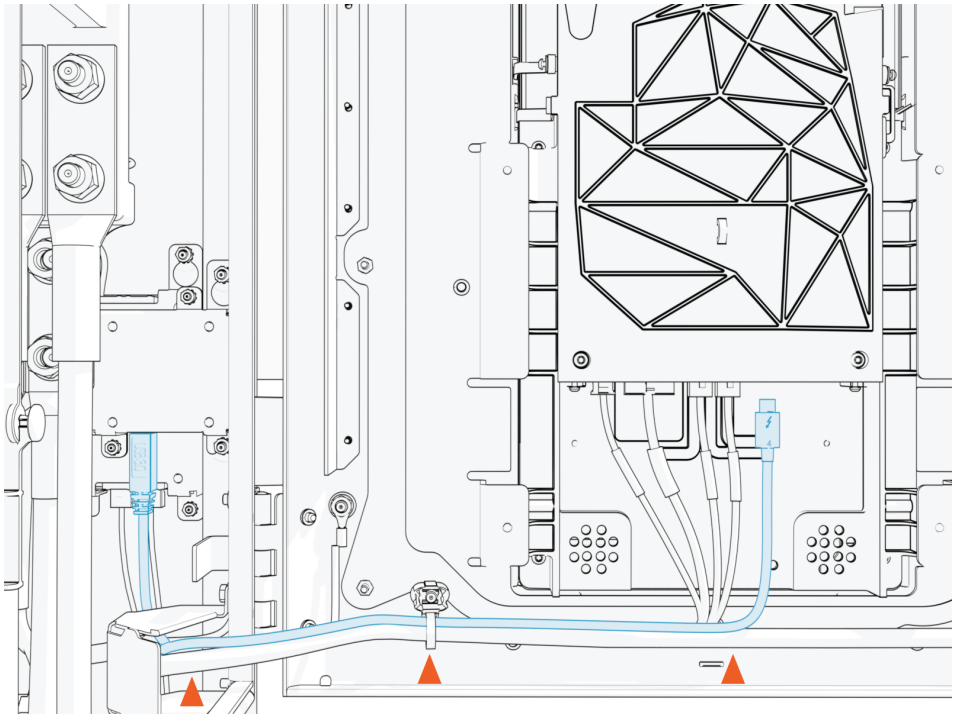

8. Connect the cable to the CCOM in any of the three USB-C ports.

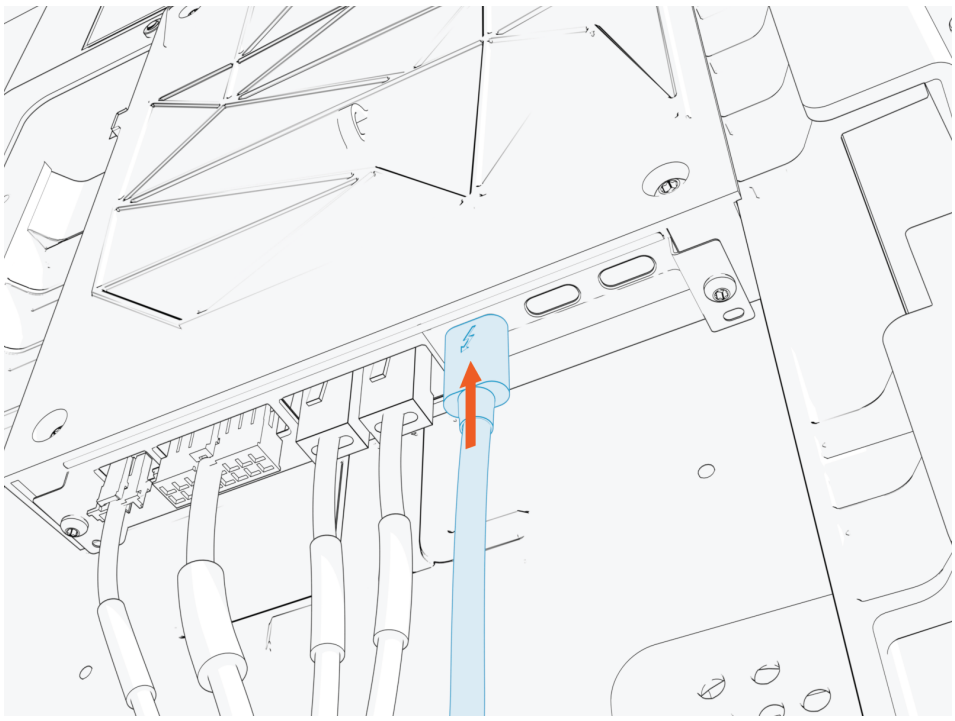

9. Zip tie the USB cable to the main cable harness.

CAUTION:

- Ensure the door can open and close without pinching or pulling of any cables.
- Ensure the USB cable does not touch the HV DC wires when the door is closed.

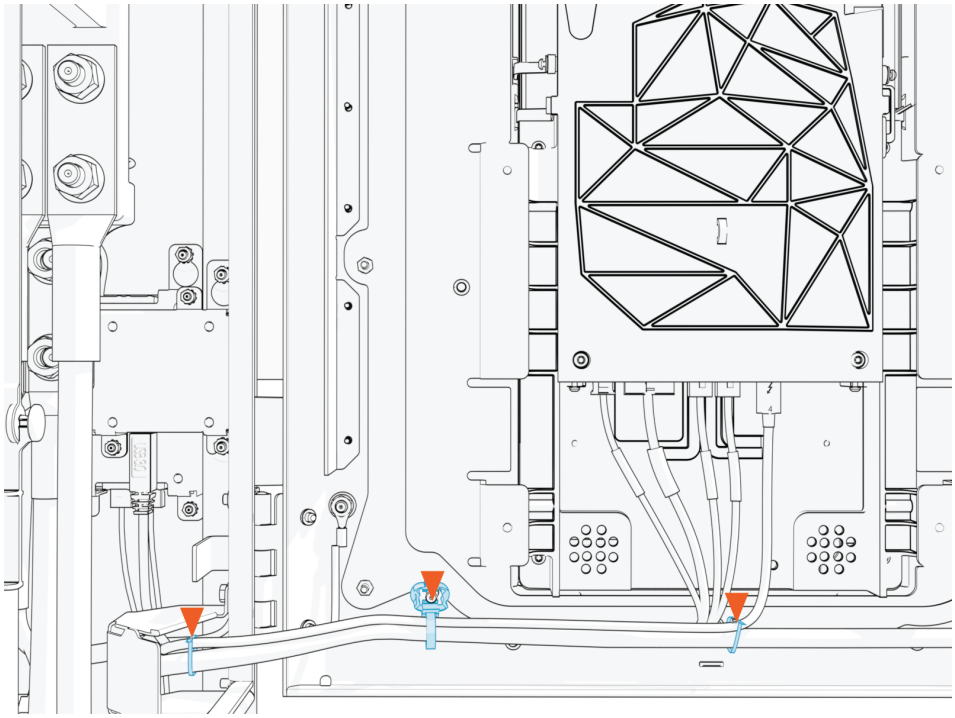

10. Pull the hardwire Ethernet cable (Cat6 STP) and cut to length for landing at the Ethernet to USB module. Allow for a service loop.

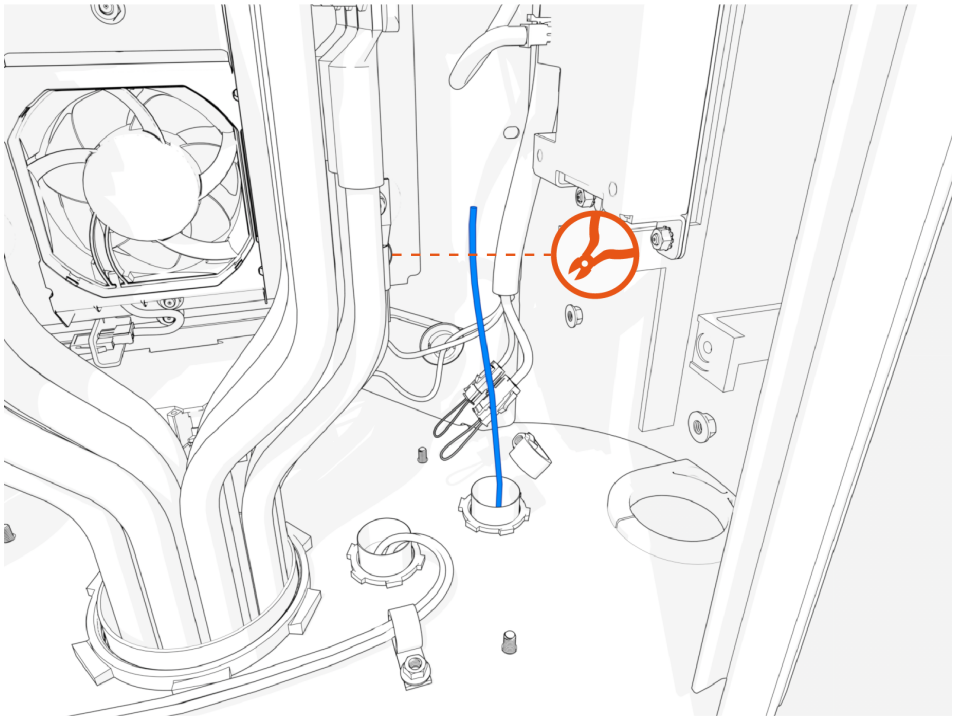

11. Field crimp an RJ45 connector onto the Ethernet cable. Use straight-through T568B pattern.

> **IMPORTANT:** Do not ground the shield at this end of the Ethernet cable. Ground the shield at the end of the Ethernet cable that connects to the network server.

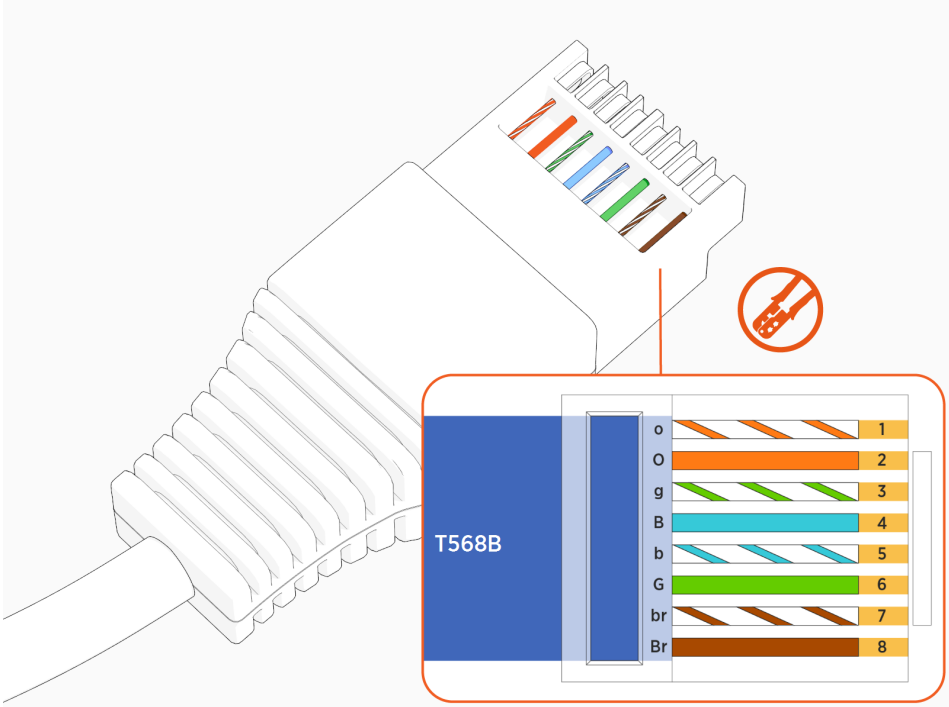

12. Test the Ethernet cable for functionality.

IMPORTANT: If using a Paige OSP Shielded GameChanger cable for a wire run length greater than 100 m (328 ft), follow the test procedure specified by Paige. See Paige GameChanger Resources.

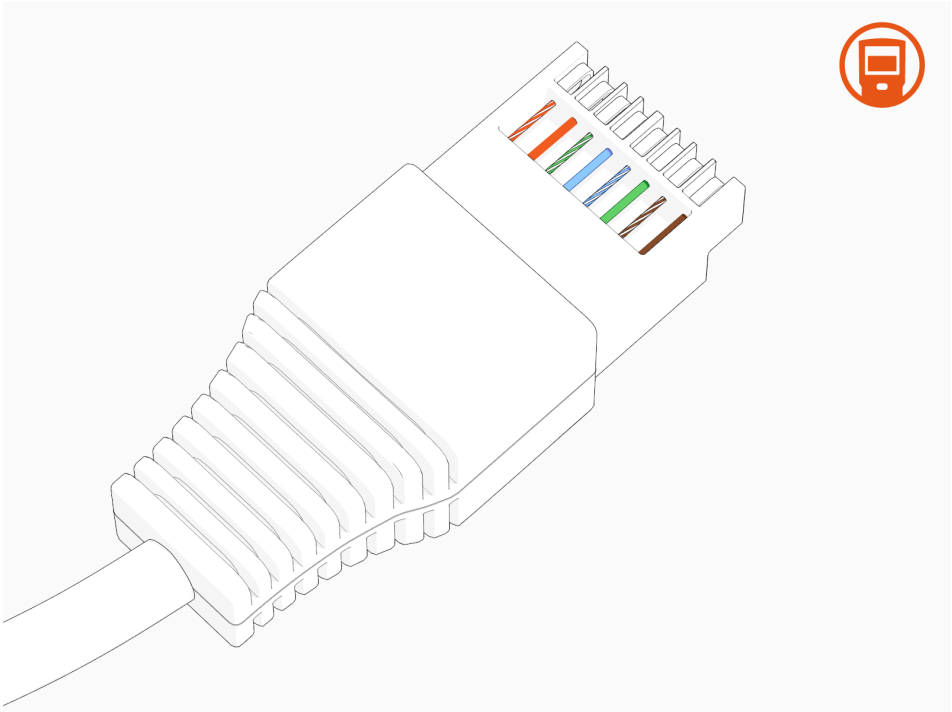

13. Route the Ethernet cable through wireway clamps and connect it to the Ethernet to USB module.

14. Route and connect the other end of the Ethernet cable to the network server.

Soft Shutdown Switch

If the site plan indicates the Power Link 2000 must be configured with a soft shutdown switch, follow procedures below to install the soft shutdown switch.

1. Pull the soft shutdown switch wiring through the conduit.

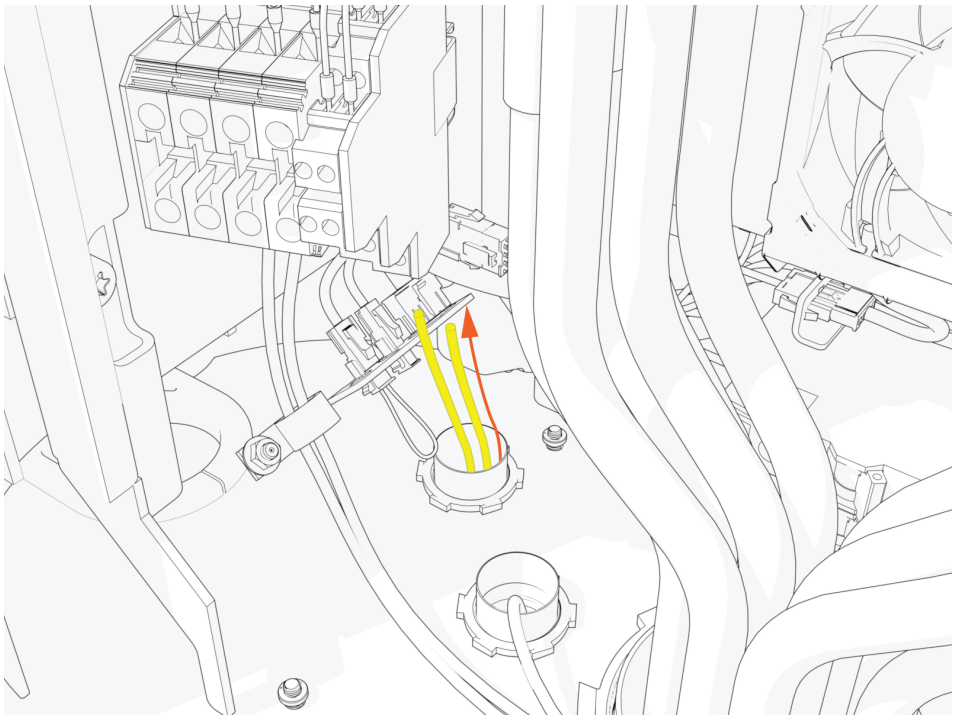

2. Loosen set screws (x2) at the soft shutdown terminal.

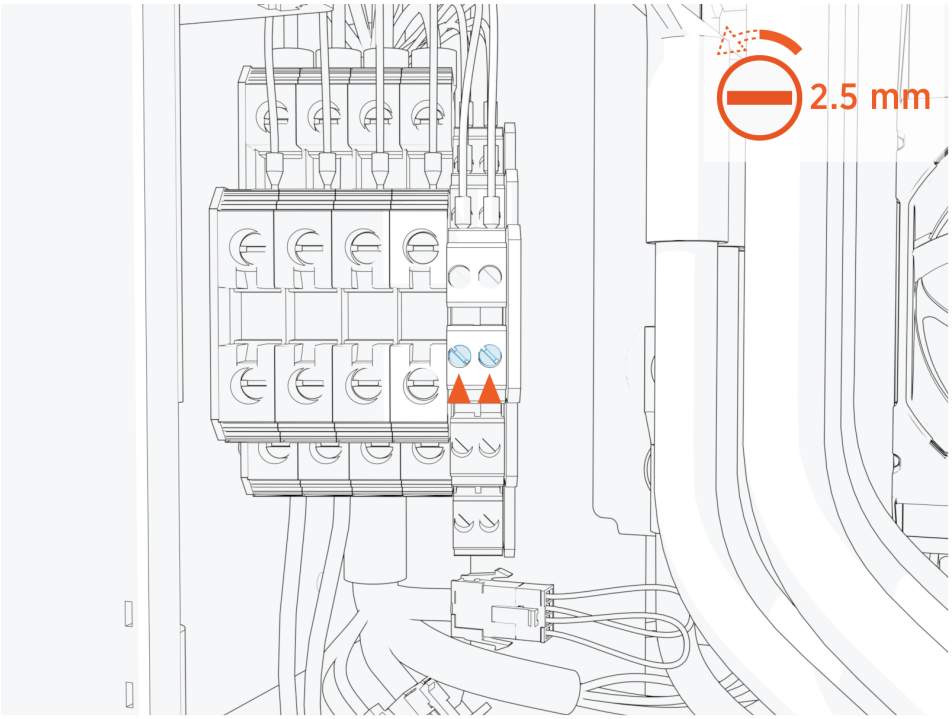

3. Twist the soft shutdown switch wires together, using a minimum of five twists per foot.

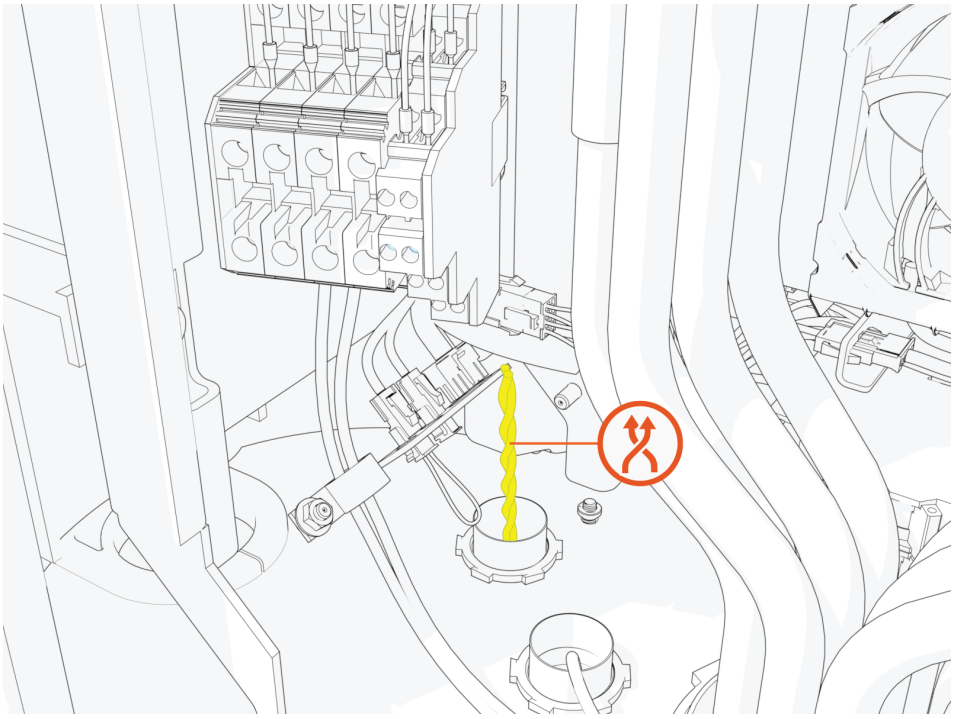

4. Route the twisted wires through the wireway clamps (if necessary, use cable ties) towards the soft shutdown terminal. Cut the wires to length for landing at the terminal.

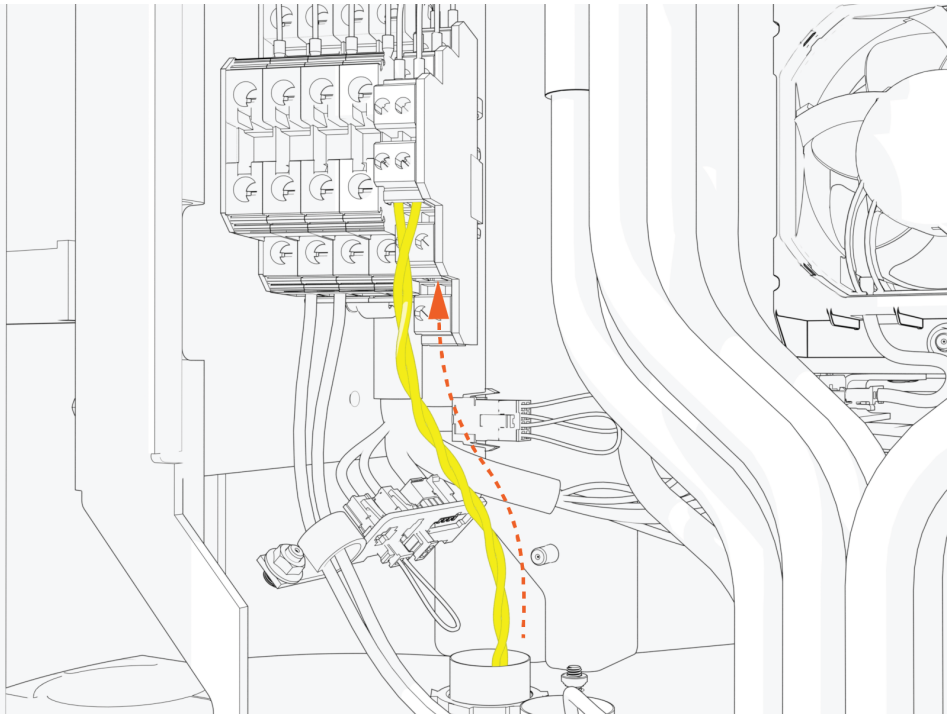

5. Strip the wire ends.

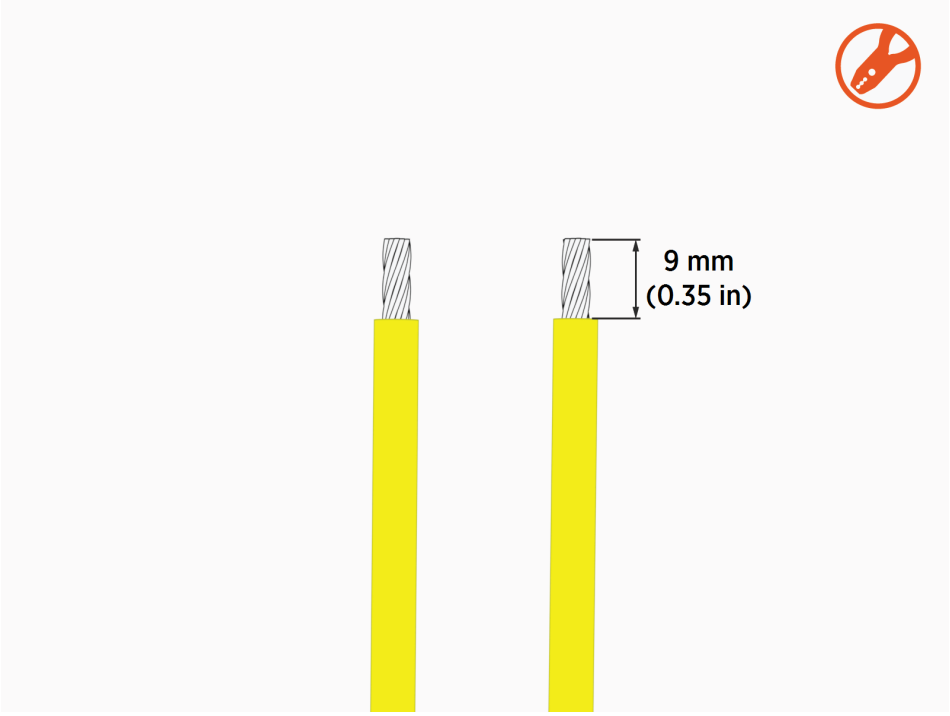

6. Insert the wires into the soft shutdown terminal. Torque set screws (x2) to **0.6 Nm (5.3 in-lb)**.

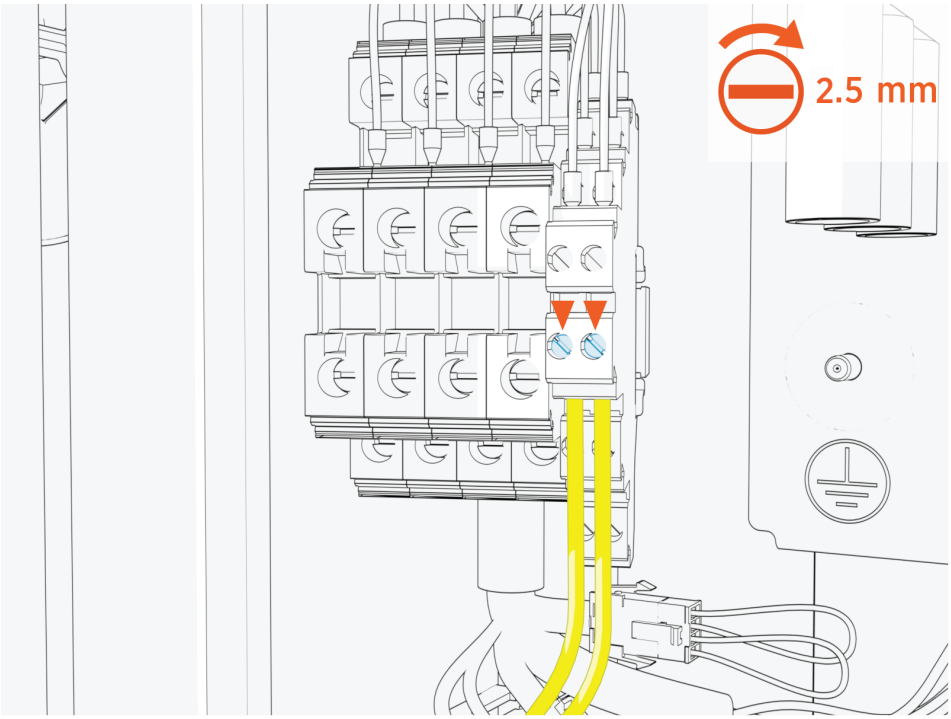

Connect Schunk SLS 201.102 Wires 8

WARNING: Do not install or service the charging station in inclement weather. If you work in snow, rain, or wind, you must use a weather-proof shelter that covers all boxes and components.

IMPORTANT: Ensure that the installation complies with all applicable codes and ordinances.

IMPORTANT: Keep components out of direct sunlight in a cool area until you install them.

CAUTION: Warranty Limitation

- If the charging station is not installed, commissioned, or serviced by a ChargePoint certified technician using a ChargePoint-approved method, it is *excluded* from all ChargePoint and other warranties and ChargePoint is not responsible.
- You must be a licensed electrician and complete training at chargepoint.com/installers to become ChargePoint certified and to access ChargePoint's web-based installer tools or ChargePoint Installer app.

CAUTION: Use low torque settings when working with power tools during installation or servicing. Over-torquing can damage the equipment.

Wiring Overview

Before connecting wires at the pantograph, study and understand the wiring information provided below. For wire quantities, sizes, and terminations, see Wires and Terminations Required for Site and refer to the site drawing.

The Schunk SLS 201.102 is configured with the following wiring:

- HV DC and high power ground power wires connecting from Power Link 2000.
- Three sub-cables within the Controller Interface Cable, connecting from the PD Controller:
  - Control pilot
  - Rest sensor
  - Pantograph control
- A ground wire connecting between the pantograph frame and the auxiliary mounting frame
- A ground wire connecting between the pantograph frame and the top of the mast

The wires land on the pantograph at the locations shown below.

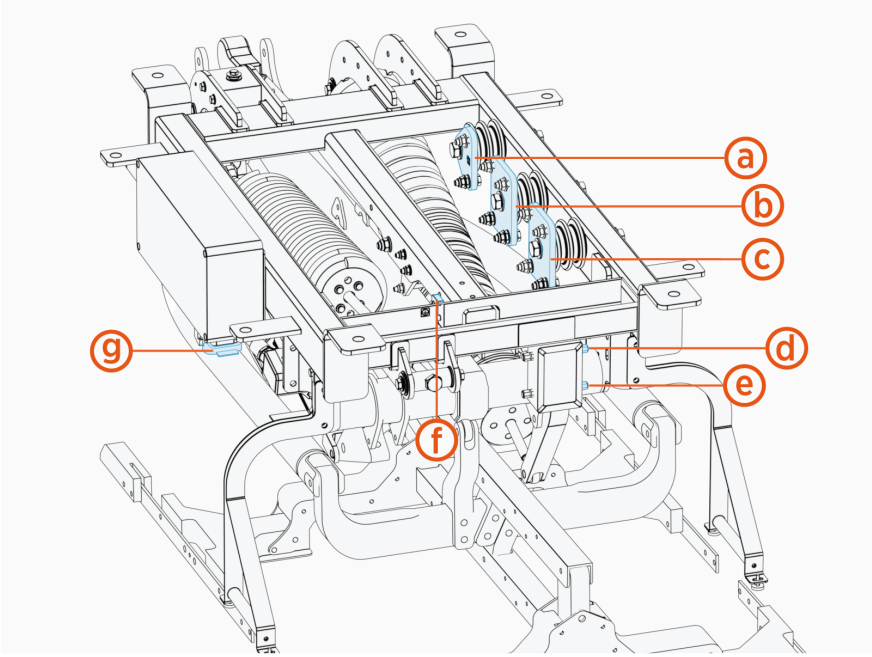

(a) High power ground (PE)
(b) HV DC input, positive (+)
(c) HV DC input, negative (-)
(d) Control pilot
(e) Rest sensor
(f) Pantograph frame ground
(g) Pantograph control

Parts Needed

To prepare for Schunk SLS 201.102 wiring, find the following parts from the Auxiliary Components Kit:

- M10 bolt and flange nut (x5 each)
- Ground wire (0.5 m, 1.6 ft)
- M8 bolt and flange nut (x1 each)
- Zip ties

Connect HV DC Wires

Prepare Wires

1. Create a service loop inside the mast arm with the HV DC wires and pull the wire ends through the wire slot towards the pantograph.

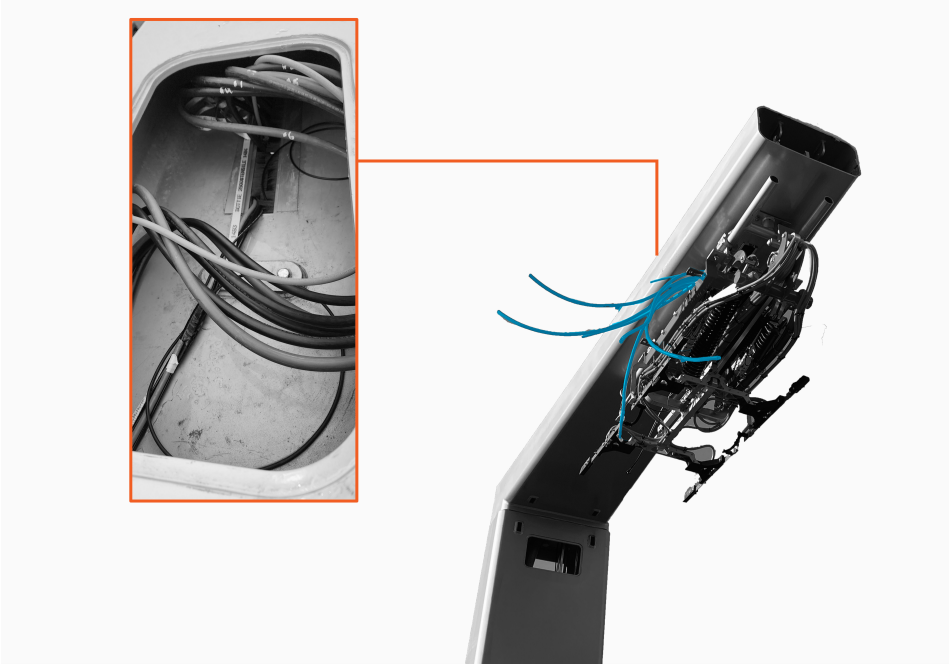

2. Cut the HV DC and high power ground wires to length for reaching the bus bars on the pantograph. Account for the length of the lug that will terminate each wire.

   Note: The positive (+) and negative (-) bus bars each have two holes for fastening wire lugs. One bolt at each hole can secure two wires, with one wire on each side of the bus bar.

3. Install wire lugs.

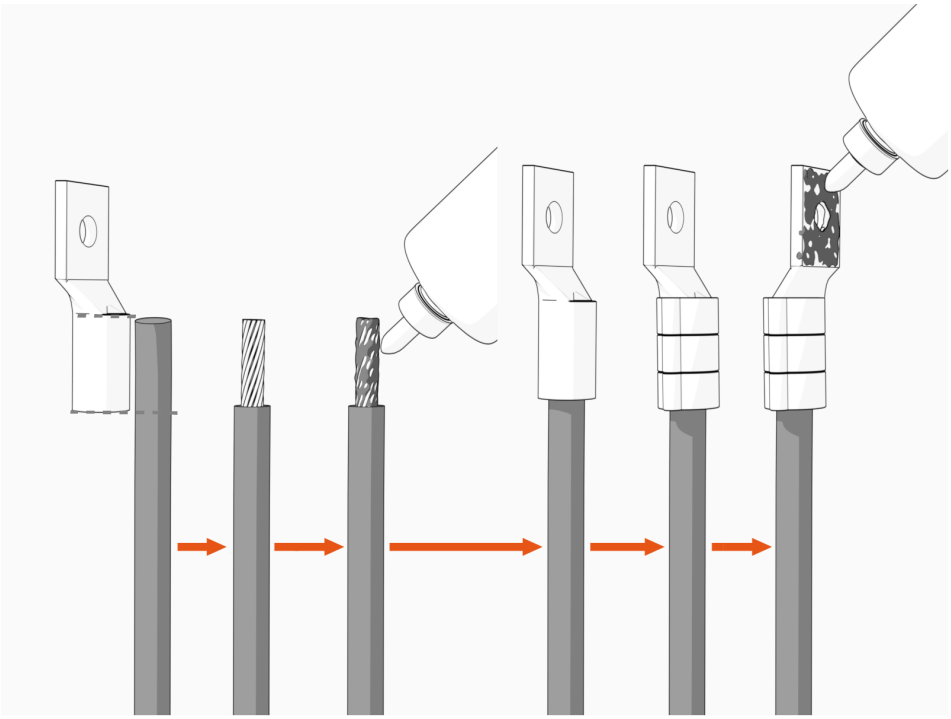

   a. Mark the lug's barrel height on the wire terminal.
   b. Strip the jacket on the marked terminal. Use a suitable wire stripper, such as Klein tool.
   c. If recommended by the wire manufacturer or local code, apply an anti-oxidant joint compound to the stripped wire material to make a gastight joint with the lug.
   d. Insert the stripped terminal into the lug's barrel and crimp it. Use a suitable lug crimping tool and/or die recommended by the lug manufacturer.
   e. Apply dielectric grease to the lug's tongue surface that comes in contact with the bus bars.

Connect Wires

1. Connect HV DC wires (positive, negative, and PE). Use provided M10 bolts and flange nuts. Torque to **19 Nm (14 ft-lb)**.

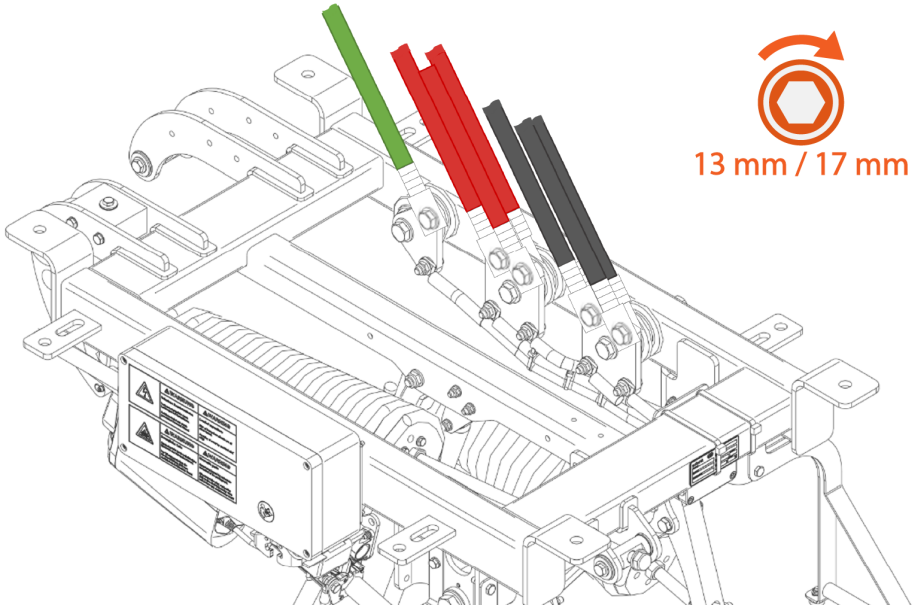

2. Mark all torqued connections. Torque marks are required to pass post-installation inspection.

Connect Pantograph Frame Ground Wires

Prepare Auxiliary Mounting Frame Ground Wire

1. Familiarize yourself with the ground cable from the Auxiliary Components Kit. See Pantograph Frame to Auxiliary Frame Ground Wire.
2. Mark the cable end with the larger ring terminal (sized for M8 (0.31 in) bolt). This is the end that installs at the pantograph.

Prepare Top of Mast Ground Wire

1. Pull the ground wire (contractor-provided) through the wire slot on the mast arm. Route one end of the wire to the pantograph. Leave the other end of the wire inside of the mast arm.

2. Prepare the wire end that will land on the pantograph frame:
    a. Strip the wire end.
    b. Install a ring terminal sized for M8 bolt.

Connect Ground Wires

1. Connect the two ground wires to the pantograph frame ground landing. Use M8 bolt and flange nut. Torque to **12.2 Nm (108 in-lb)**.

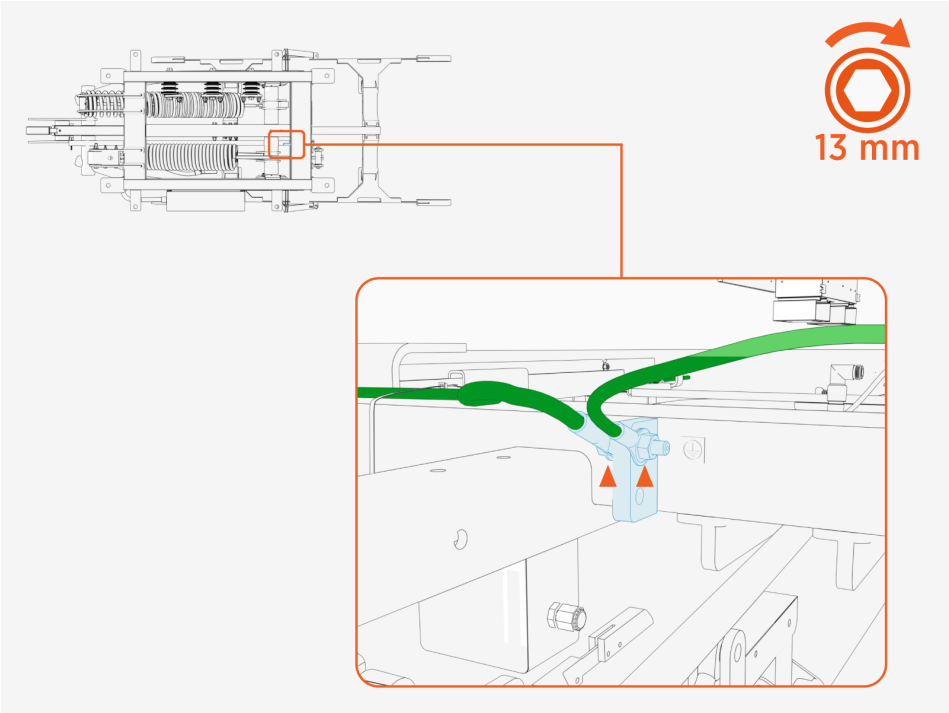

2. Use a zip tie to secure the wires so that they are clear of the pantograph during operation. The wires must be kept away from the pantograph arms and charging rails.

Connect LV DC Cables

Connect Pantograph Control Cable

1. Route the pantograph control cable to the pantograph electric control unit. Ensure the cable is kept clear of high voltage exposed conductors and the pantograph arms through their full movement range.

2. Connect the pantograph control cable.

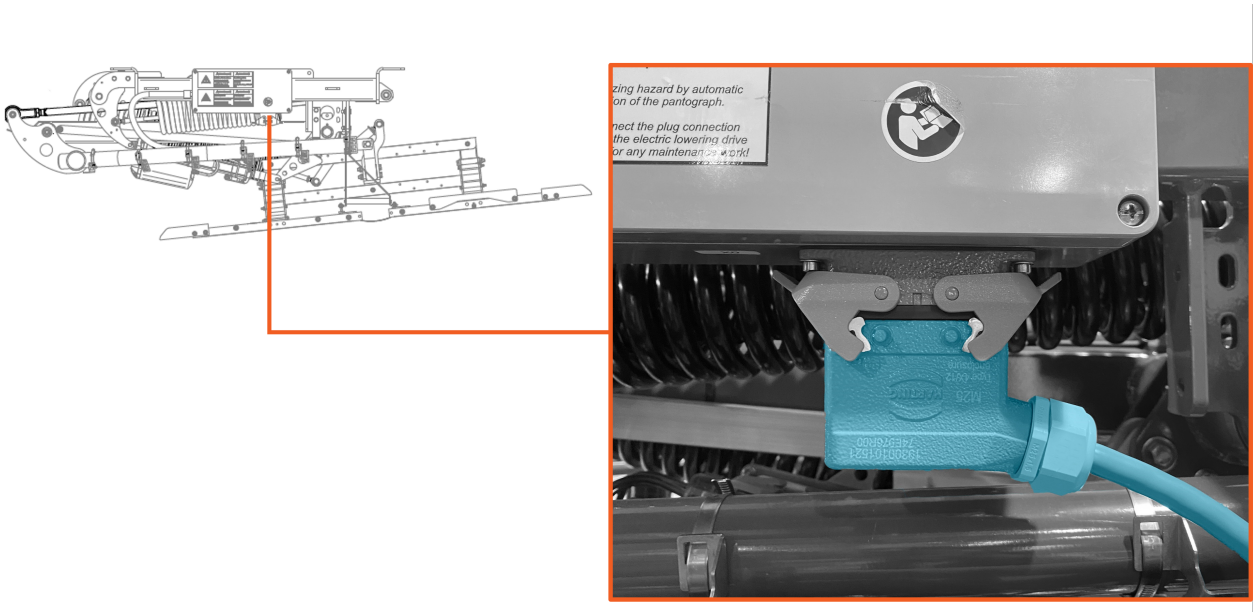

3. Push down on the latch tabs to secure the connector.

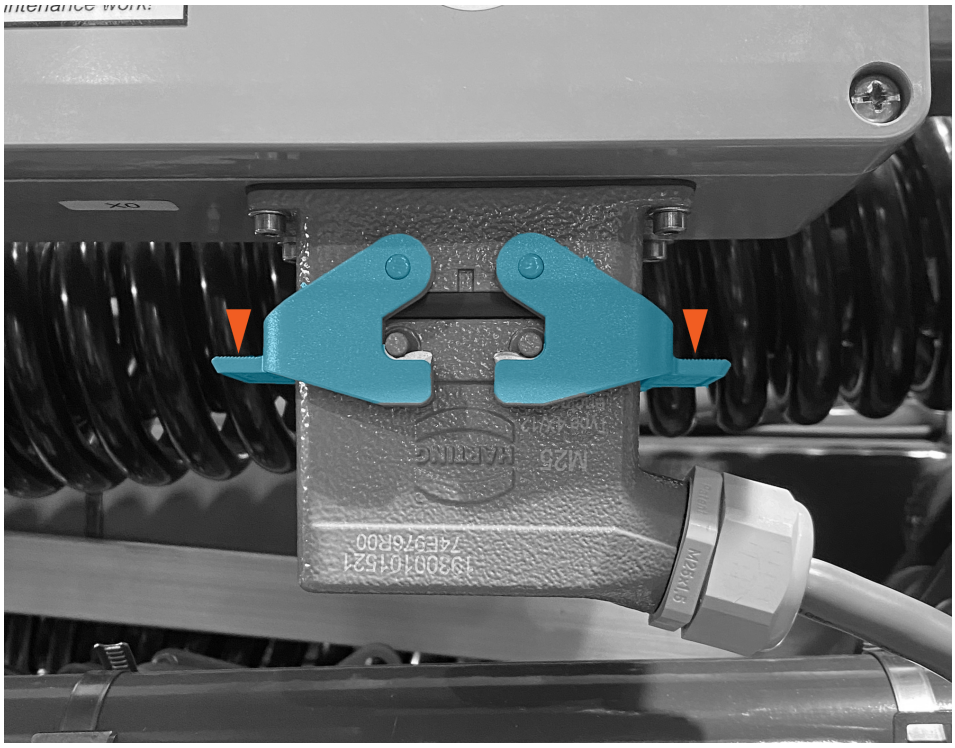

4. Use a zip tie to secure the cable so that it is clear of the pantograph during operation. The cable must be kept away from the pantograph arms and charging rails.

Connect Control Pilot Cable

1. Route the pantograph control pilot cable to reach the pantograph control box. Ensure the cable is kept clear of high voltage exposed conductors and the pantograph arms through the entire movement range.

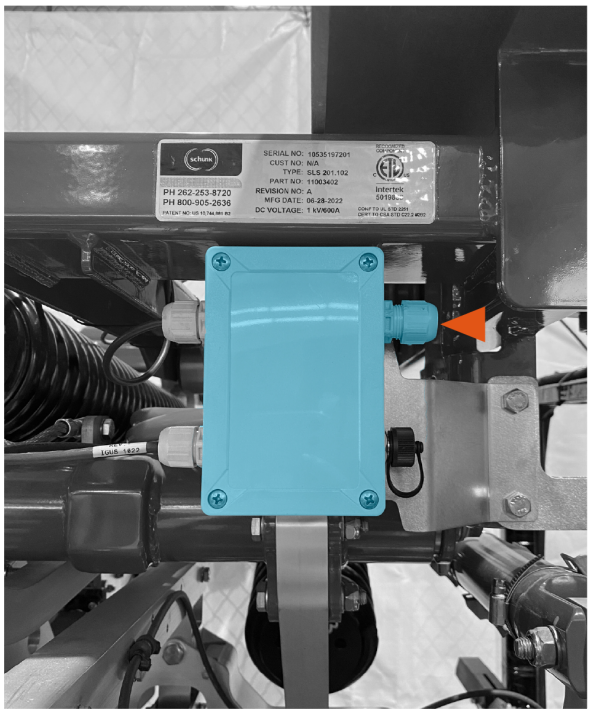

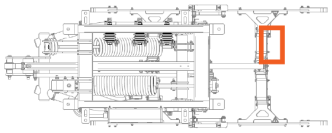

2. Quarter turn spring latches (x4) to open the pantograph control box.

   Note: The latches are operated with a Phillips head screwdriver but they are not screws. Gently push the latch head inwards with the screwdriver and initiate the turn. Part way through the turn, keep the screwdriver in contact with the latch, but discontinue application of inward pressure. Continue turning until the latch pin pops out.

   IMPORTANT: Be gentle when operating the latches. The latches can break if the screwdriver applies significant torque.

3. Route the control pilot cable though the cable gland.

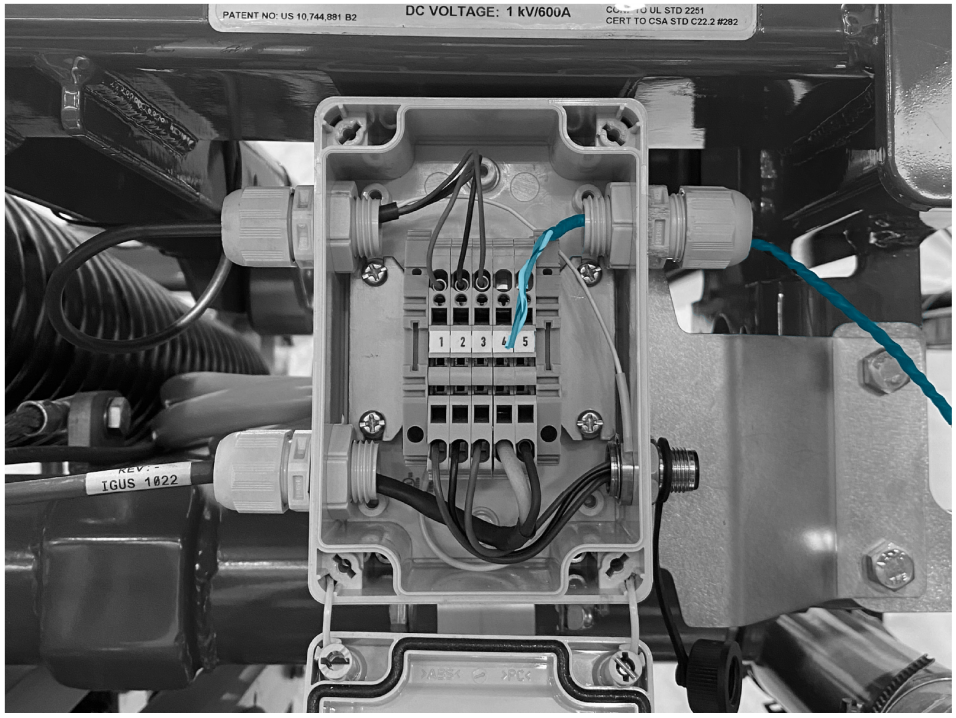

4. Strip the wire jackets.

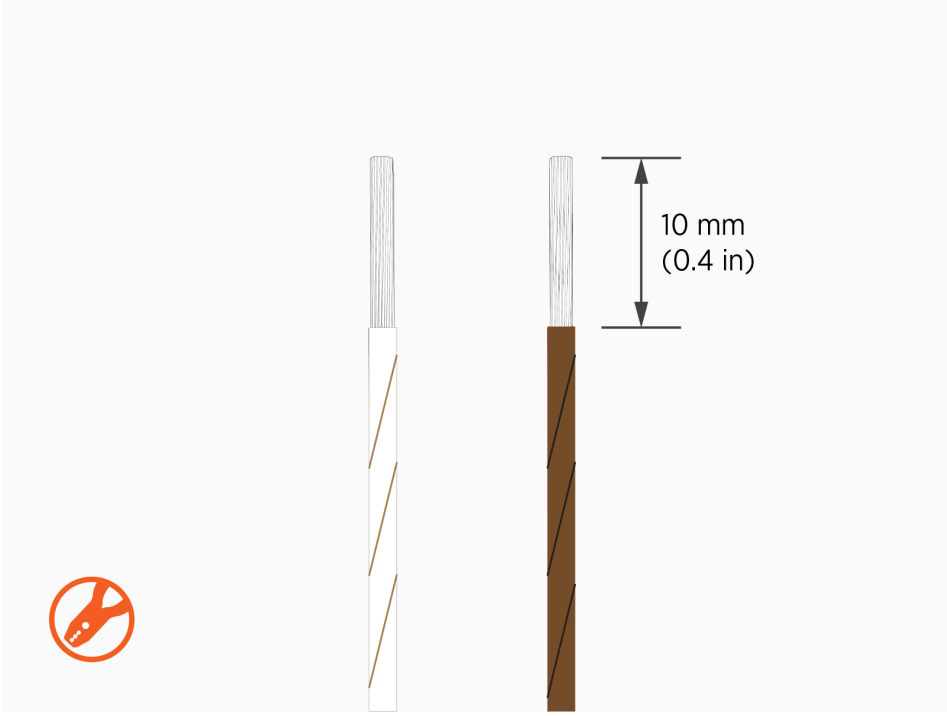

5. Insert the control pilot wire (white/brown) into terminal 4. Use the provided wire terminal operating tool or a flat head screwdriver to open the terminal port. Push-pull to test the wire is secured.

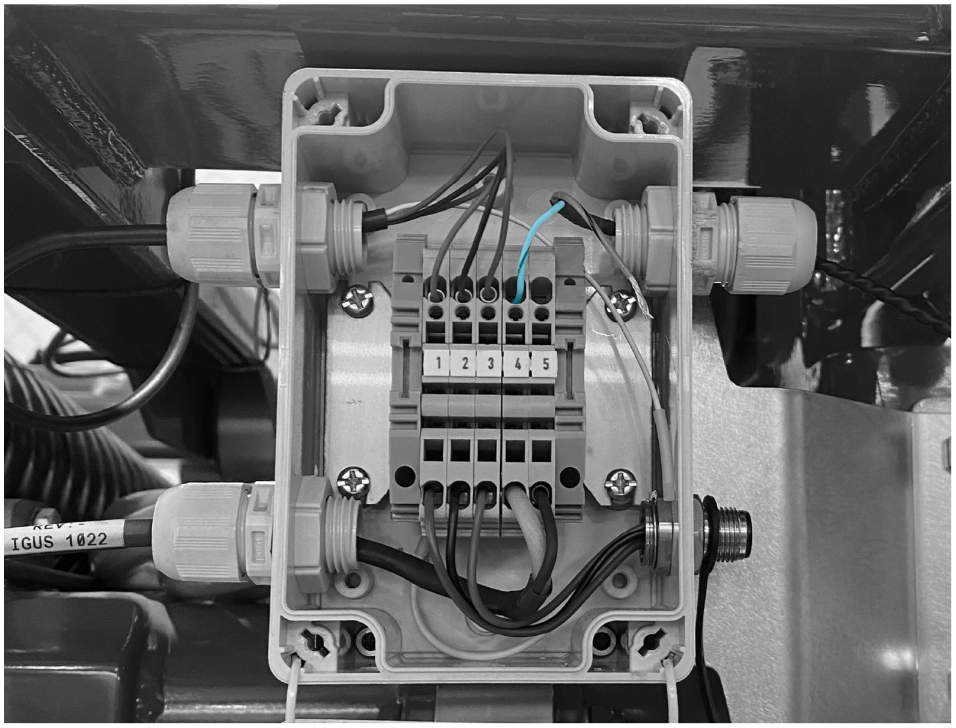

6. Insert the control pilot shield wire (brown/black) into terminal 5. Use the provided wire terminal operating tool or a flat head screwdriver to open the terminal port. Push-pull to test the wire is secured.

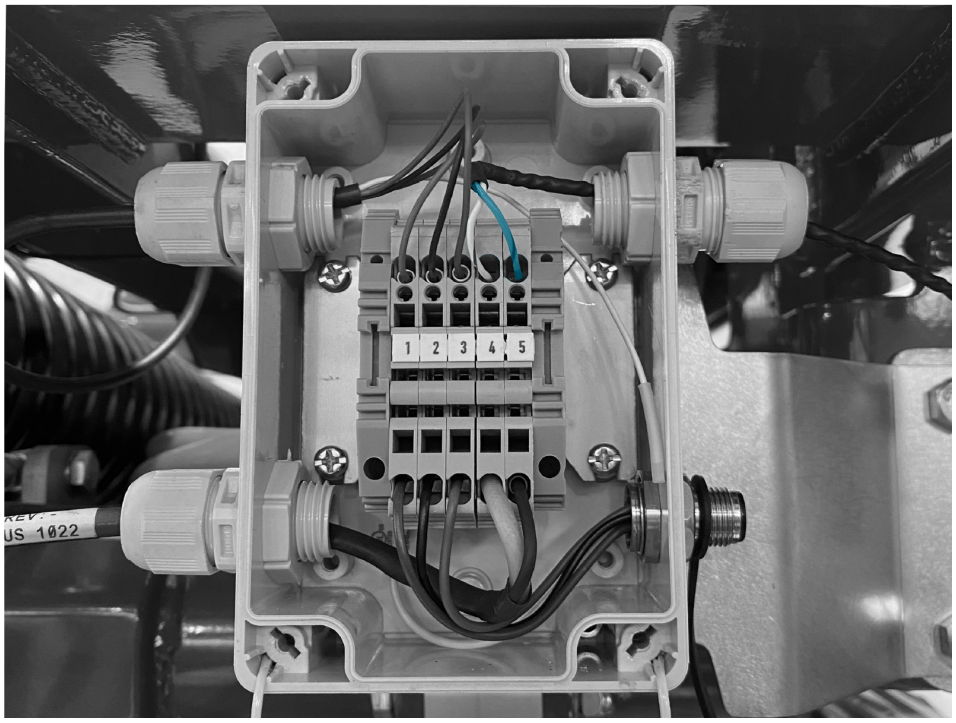

7. Close the box. Quarter turn spring latches (x4).

   Note: The latches are operated with a Phillips head screwdriver but they are not screws. Gently push the latch head inwards with the screwdriver and initiate the turn. Part way through the turn, keep the screwdriver in contact with the latch, but discontinue application of inward pressure. Continue turning until the latch pin latches into a locking groove.

   IMPORTANT: Be gentle when operating the latches. The latches can break if the screwdriver applies significant torque.

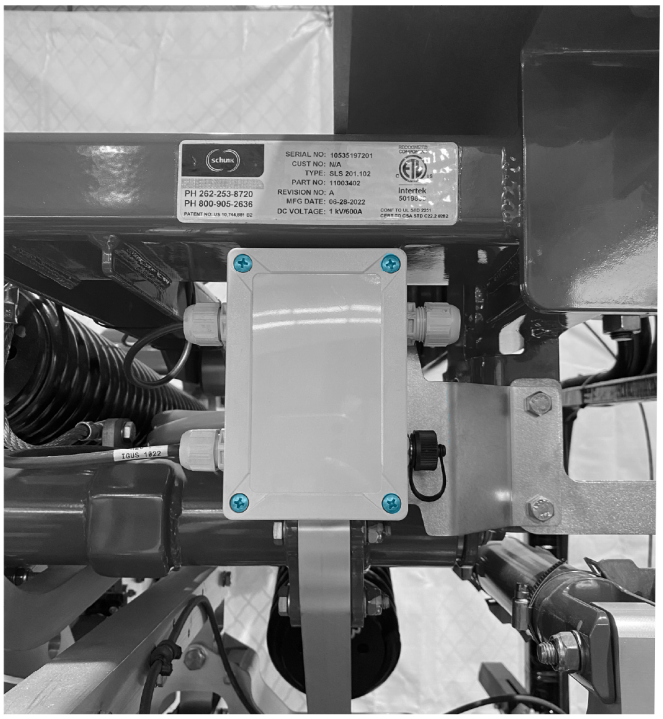

8. Tighten the cable gland. Torque to **1.5 Nm (13.3 in-lb)**.

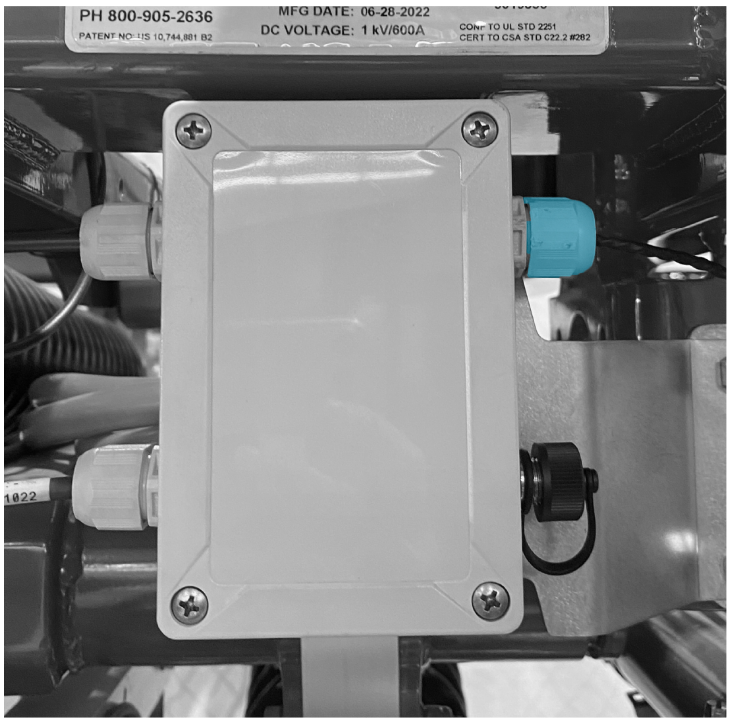

9. Use a zip tie to secure the cable so that it is clear of the pantograph during operation. The cable must be kept away from the pantograph arms and charging rails.

Connect Rest Sensor Cable

1. Route the pantograph rest sensor cable to the pantograph control box. Ensure the cable is kept clear of high voltage exposed conductors and the pantograph arms through their full movement range.

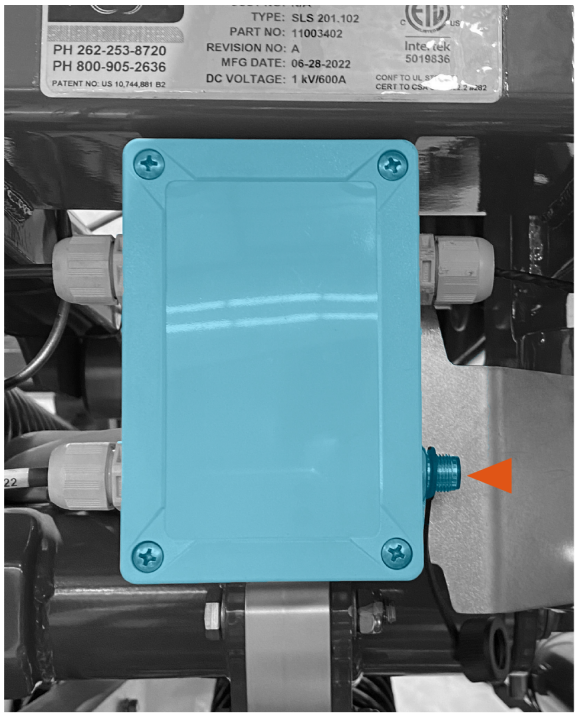

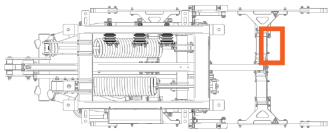

2. Connect the rest sensor cable. Hand-tighten.

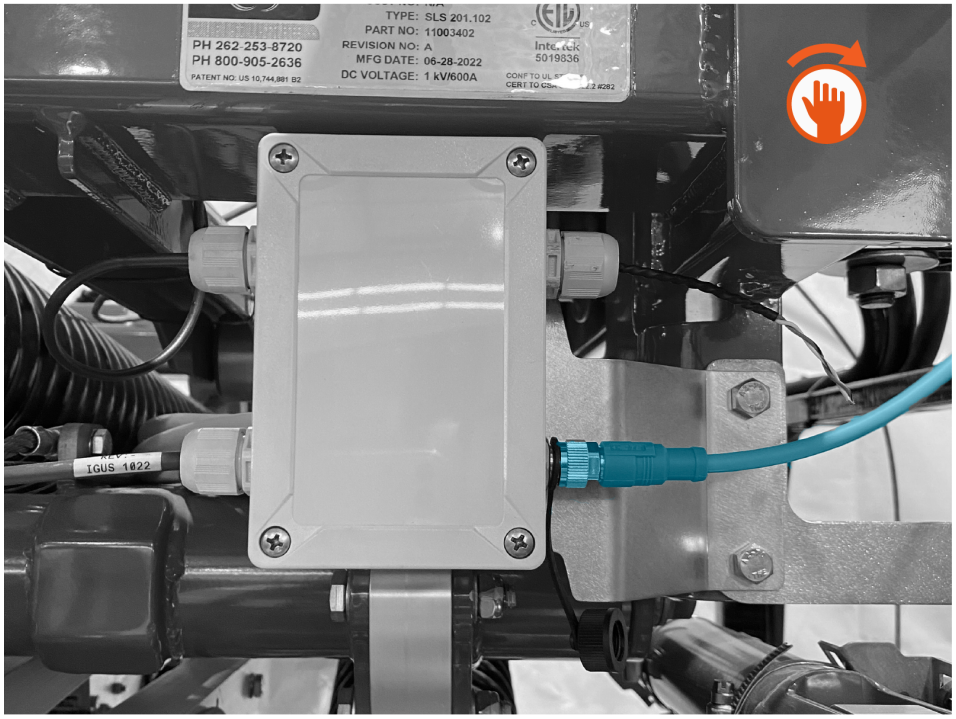

3. Use a zip tie to secure the cable so that it is clear of the pantograph during operation. The cable must be kept away from the pantograph arms and charging rails.

Mount Auxiliary Components to Schunk SLS 201 9

WARNING: Do not install or service the charging station in inclement weather. If you work in snow, rain, or wind, you must use a weather-proof shelter that covers all boxes and components.

IMPORTANT: Ensure that the installation complies with all applicable codes and ordinances.

IMPORTANT: Keep components out of direct sunlight in a cool area until you install them.

CAUTION: Warranty Limitation

- If the charging station is not installed, commissioned, or serviced by a ChargePoint certified technician using a ChargePoint-approved method, it is *excluded* from all ChargePoint and other warranties and ChargePoint is not responsible.
- You must be a licensed electrician and complete training at chargepoint.com/installers to become ChargePoint certified and to access ChargePoint's web-based installer tools or ChargePoint Installer app.

CAUTION: Use low torque settings when working with power tools during installation or servicing. Over-torquing can damage the equipment.

Overview and Parts Needed

A mounting frame attaches the Wi-Fi antenna, RFID antenna, and status LED to the Schunk SLS 201 pantograph.

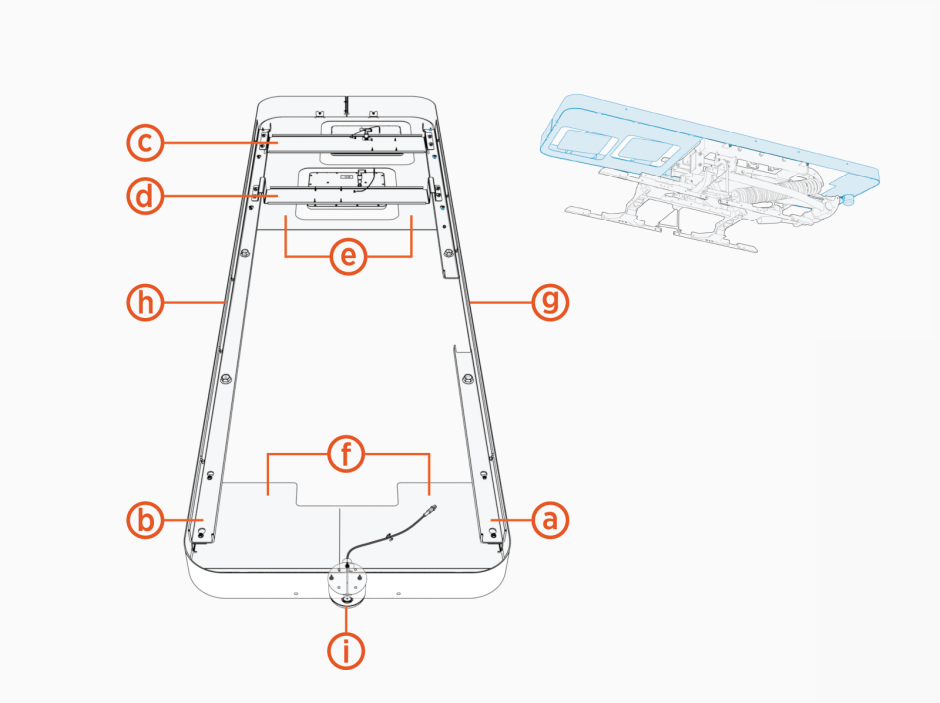

- **(a)** Mounting frame rail, right
- **(b)** Mounting frame rail, left
- **(c)** Wi-Fi antenna assembly
- **(d)** RFID antenna assembly
- **(e)** Mounting frame cover, rear
- **(f)** Mounting frame cover, front
- **(g)** Mounting frame side cover, right
- **(h)** Mounting frame side cover, left
- **(i)** Status LED

To prepare for auxiliary components installation, find the following parts from the Auxiliary Components Kit:

- All parts listed above
- M16 bolt and flange nut (x4 each)

Install Side Rails

1. Align the right side rail to the pantograph aid mounting supports.

   Note: The right side rail has a cutout notch to accommodate the pantograph electric control unit. The left side rail does not.

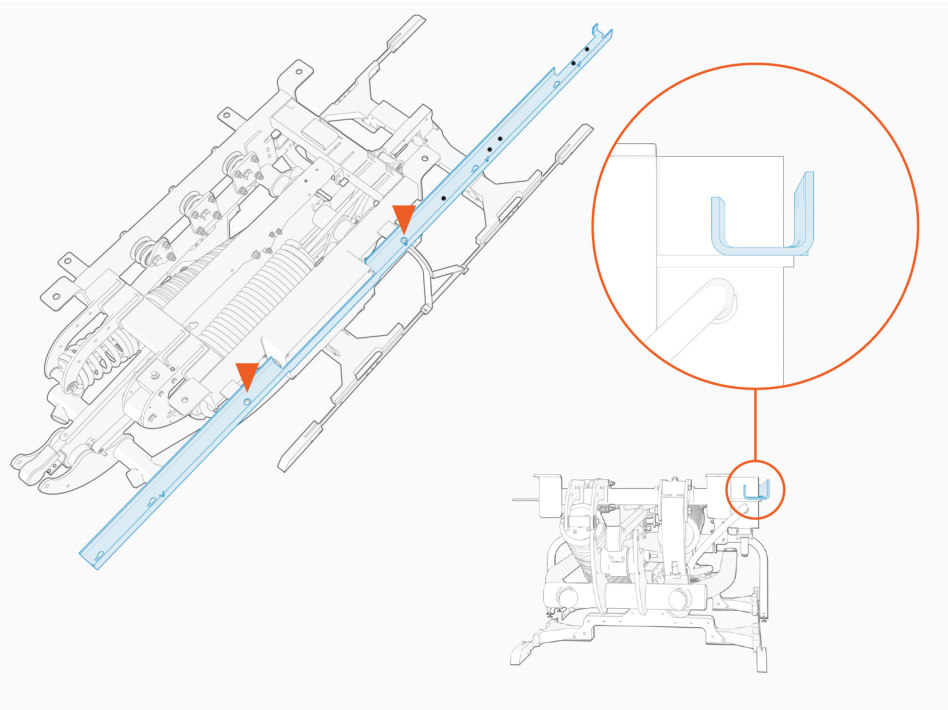

2. Install M16 bolt and flange nut at mounting supports (x2 fastener sets total) to fasten rail. Torque to **94.9 Nm (70 ft-lb)**.

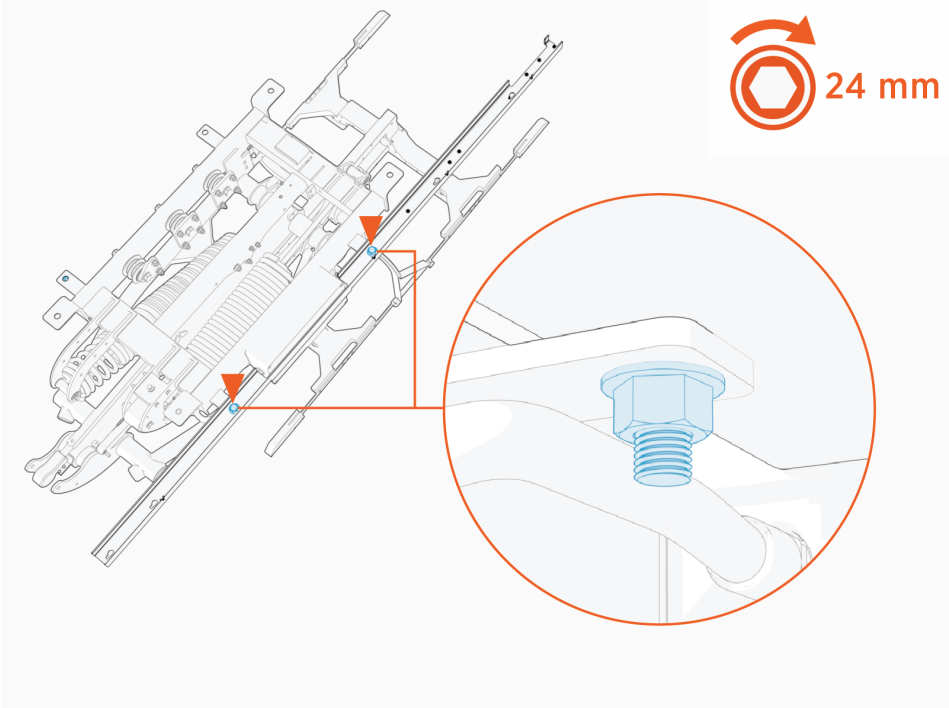

3. Repeat above steps to install the left side rail on the pantograph.

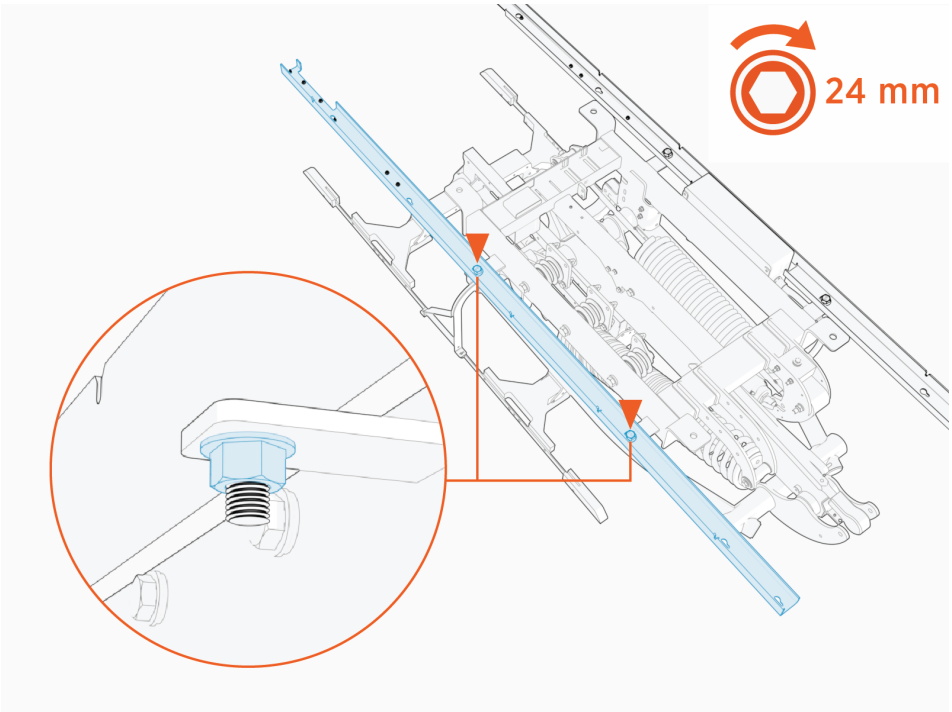

Install Wi-Fi and RFID Antenna Assemblies

1. Loosen (do not remove) the M6 nuts (x8) at the rear of the left and right rails.

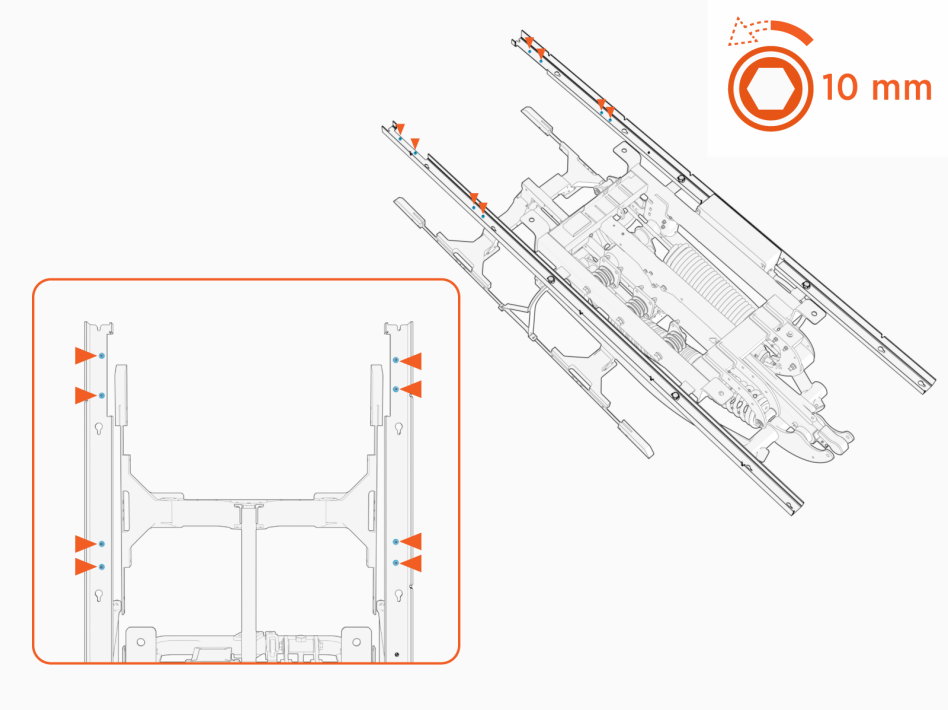

2. Install the RFID assembly onto the left and right rails. Slide the assembly until the keyholes lock on the mounting studs.

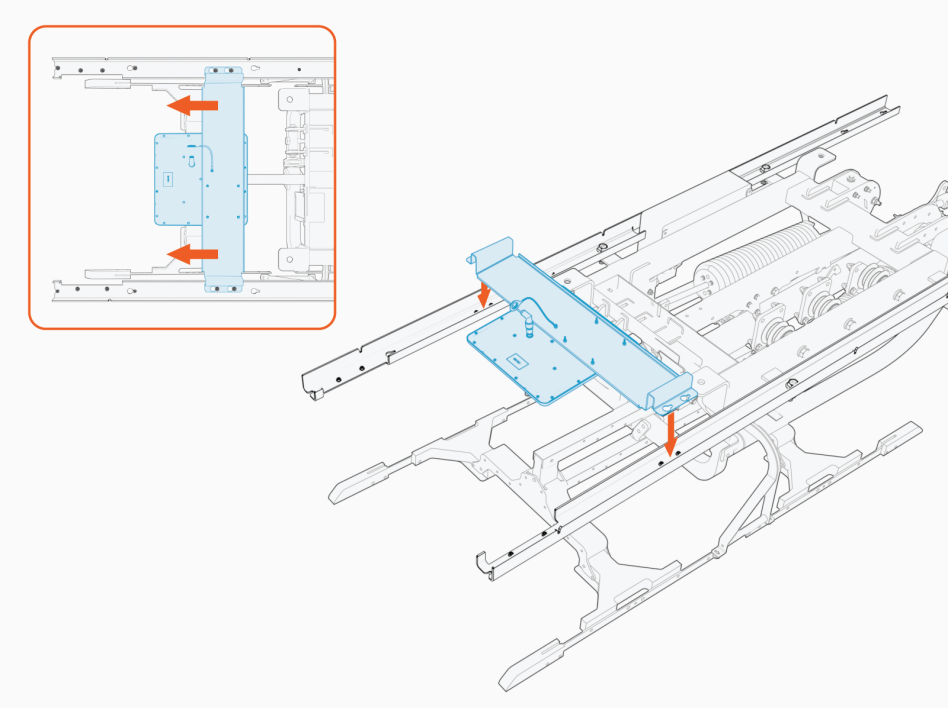

3. Tighten the M6 nuts (x4). Torque to **5.6 Nm (50 in-lb)**.

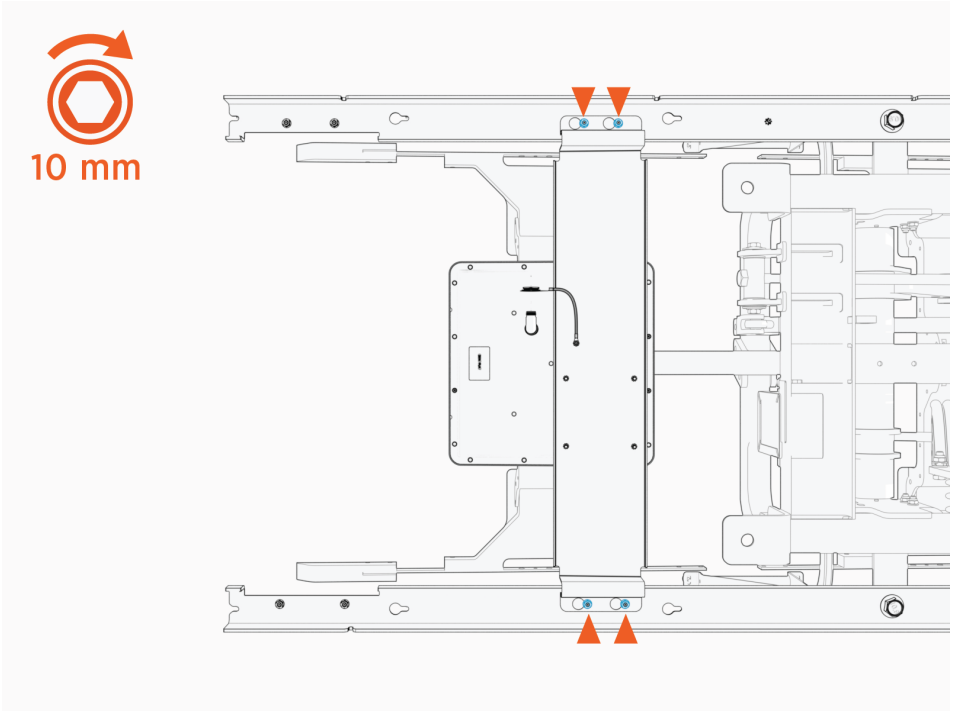

4. Install the Wi-Fi assembly onto the left and right rails. Slide the assembly until the keyholes lock on the mounting studs.

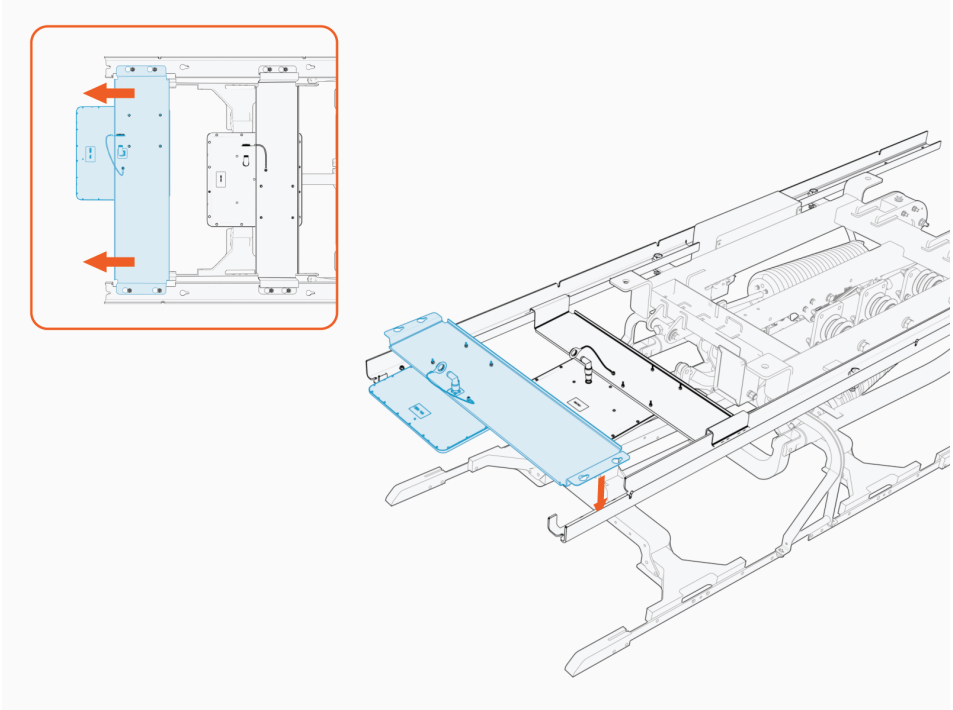

5. Tighten the M6 nuts (x4). Torque to **5.6 Nm (50 in-lb)**.

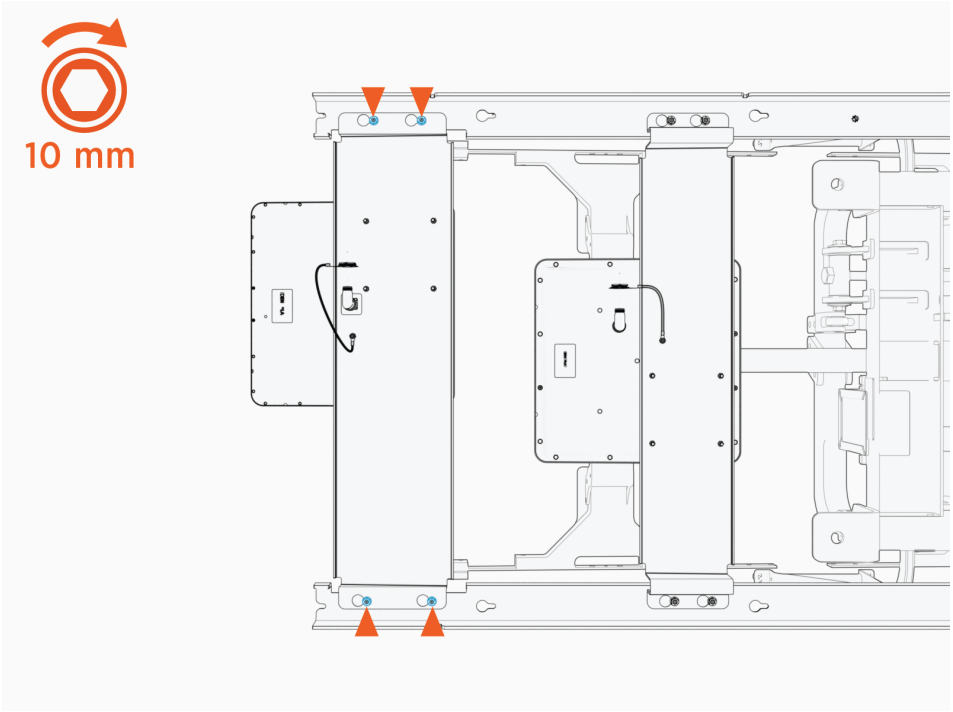

Install Front Cover And Status LED

1. Loosen (do not remove) M5 nuts (x3) on the status LED.

2. Install the status LED on the front cover at keyholes.

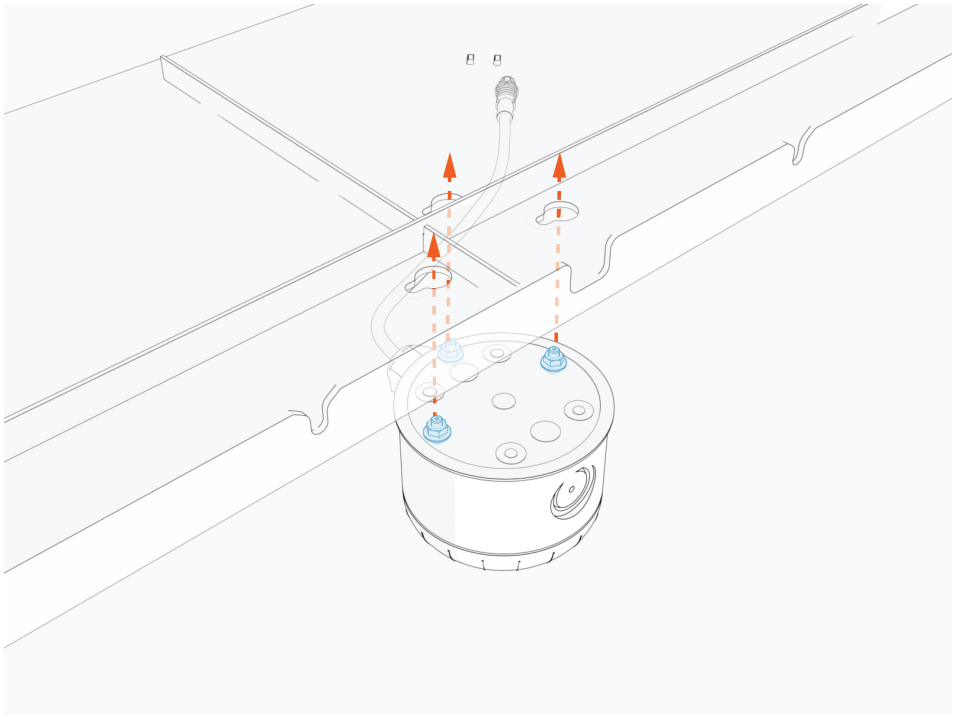

3. Slide the status LED until the mounting studs lock in the keyholes. Torque M5 nuts (x3) to **4.5 Nm (40 in-lb)**.

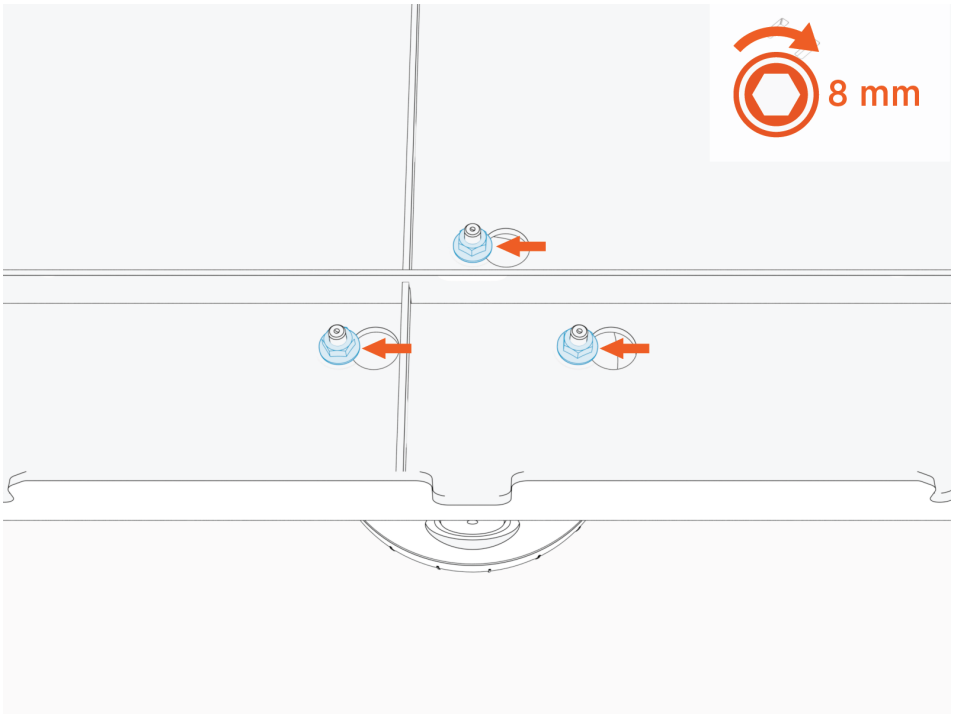

4. Loosen (do not remove) M6 nuts (x4) on the front cover.

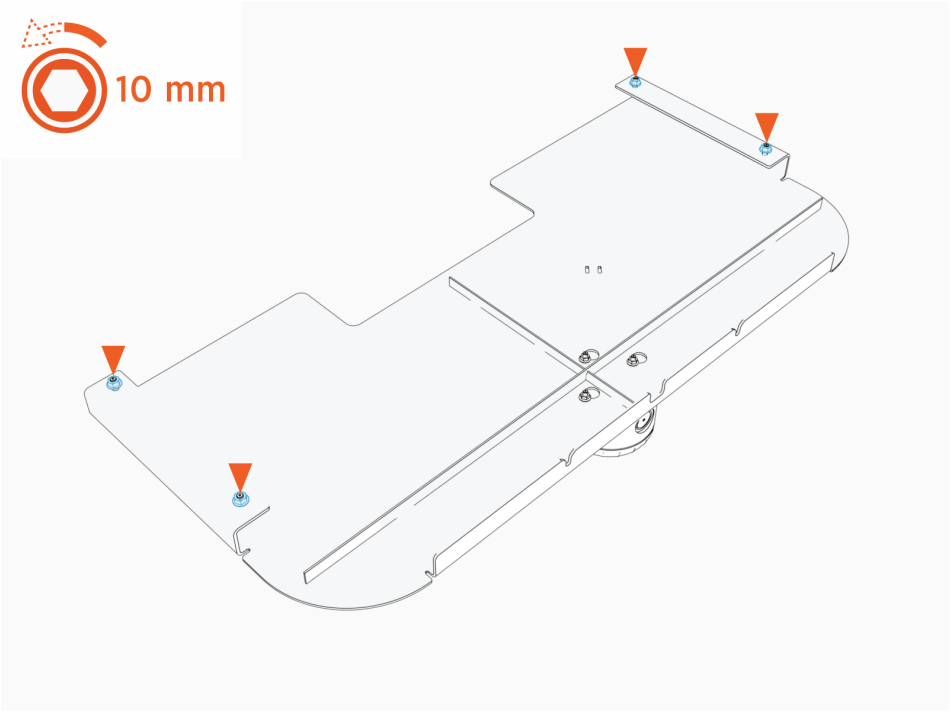

5. Install the front cover assembly onto the left and right rails. Slide the cover until it locks into the keyholes.

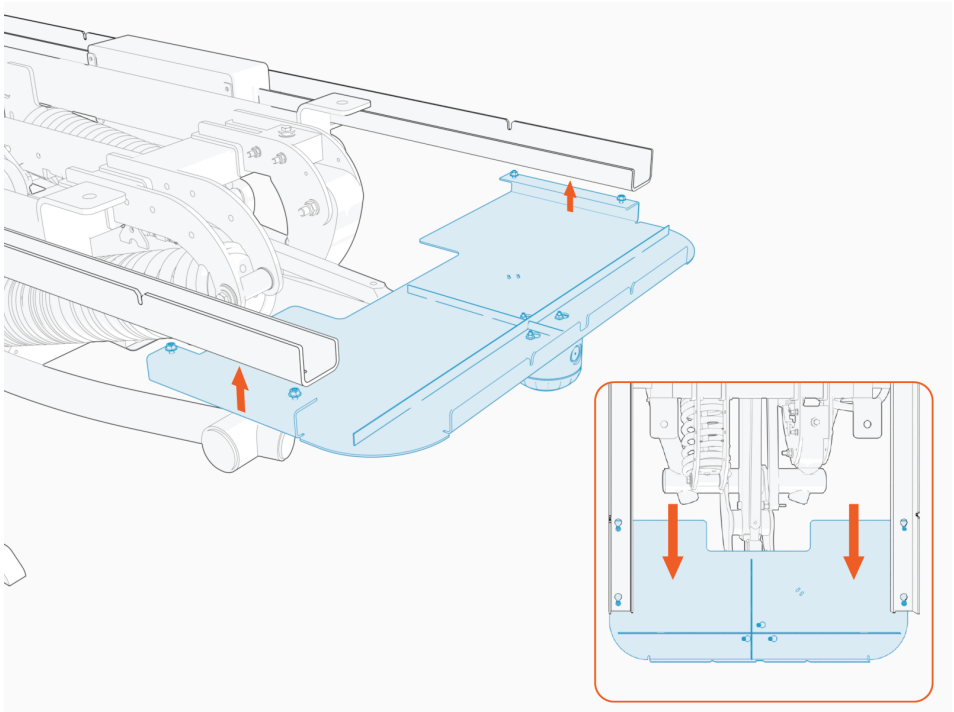

6. Tighten the M6 nuts (x4). Torque to **5.6 Nm (50 in-lb)**.

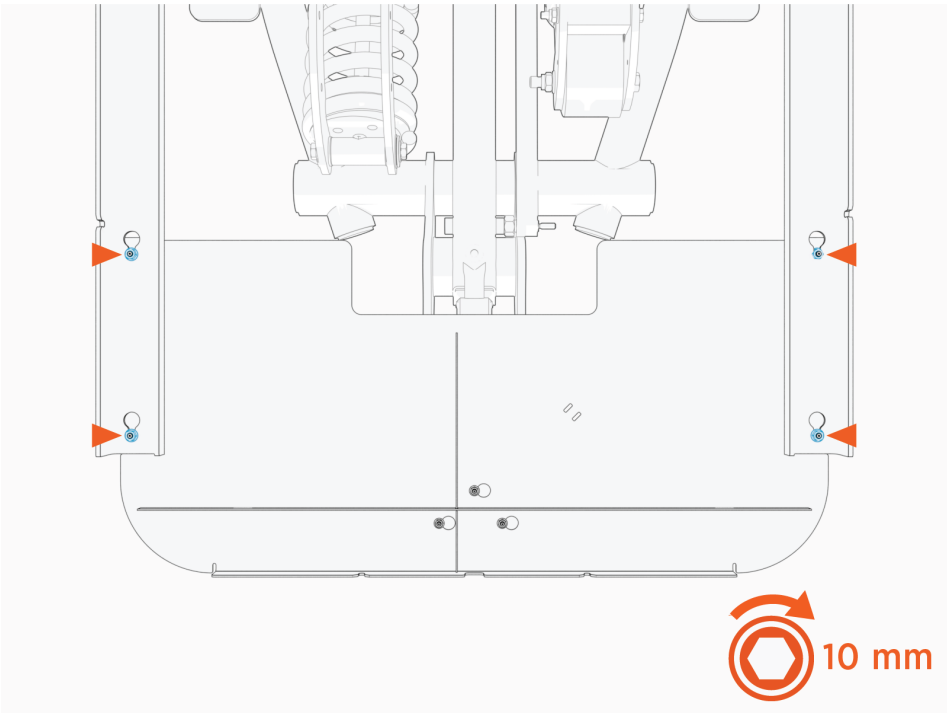

Save Parts

Save the following parts of the auxiliary components mounting frame for later installation:

- Rear cover
- Side covers

These parts will not install until after cables are connected to the antennas. See Complete Schunk SLS 201.102 Auxiliary Components Frame.

Connect Auxiliary Component Cables 10

WARNING: Do not install or service the charging station in inclement weather. If you work in snow, rain, or wind, you must use a weather-proof shelter that covers all boxes and components.

IMPORTANT: Ensure that the installation complies with all applicable codes and ordinances.

IMPORTANT: Keep components out of direct sunlight in a cool area until you install them.

CAUTION: Warranty Limitation

- If the charging station is not installed, commissioned, or serviced by a ChargePoint certified technician using a ChargePoint-approved method, it is *excluded* from all ChargePoint and other warranties and ChargePoint is not responsible.
- You must be a licensed electrician and complete training at chargepoint.com/installers to become ChargePoint certified and to access ChargePoint's web-based installer tools or ChargePoint Installer app.

CAUTION: Use low torque settings when working with power tools during installation or servicing. Over-torquing can damage the equipment.

Parts Needed

To prepare for auxiliary component cable connection, find the following part from the Auxiliary Components Kit:

- M6 bolt and nut

Connect RFID Antenna Cable

1. Route the RFID cable end to the RFID antenna. Keep the cable clear of high voltage exposed conductors and the pantograph arms through the entire movement range.

> **CAUTION:** You may coil the cable to take up excess slack. However, note the LMR-240 cable shipped with Pantograph Down 2000 has a one-time bend radius of 19 mm (0.75 in) and repeated bend radius of 63 mm (2.5 in). Do not exceed the bend radius or the cable may be damaged and the system may not operate. If using an LMR-240 equivalent cable, do not exceed the bend radius limits for the cable type used.

2. Connect the RFID antenna cable. Torque to **1.5 Nm (13.3 in-lb)**. The connection to the RFID antenna assembly may be oriented at any angle to fit the site cabling routing needs. Check that all connections between adapters are torqued after cable is installed.

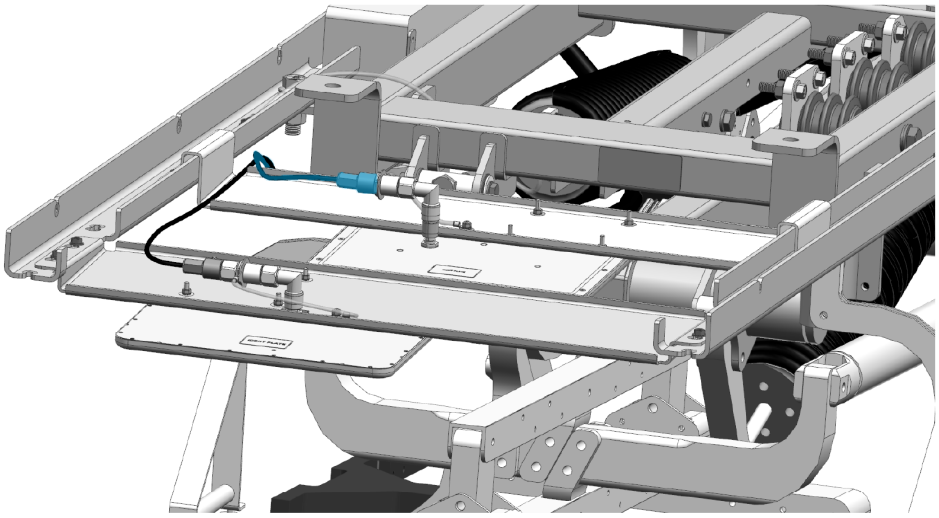

3. Use zip ties to secure the antenna cable so that it is clear of the pantograph during operation.

Connect Wi-Fi Antenna Cable

1. Route the Wi-Fi cable end to the Wi-Fi antenna. Keep the cable clear of high voltage exposed conductors and the pantograph arms through the entire movement range.

> **CAUTION:** You may coil the cable to take up excess slack. However, note the LMR-240 cable shipped with Pantograph Down 2000 has a one-time bend radius of 19 mm (0.75 in) and repeated bend radius of 63 mm (2.5 in). Do not exceed the bend radius or the cable may be damaged and the system may not operate. If using an LMR-240 equivalent cable, do not exceed the bend radius limits for the cable type used.

2. Connect the Wi-Fi antenna cable. Torque to **1.5 Nm (13.3 in-lb)**. The connection to the Wi-Fi antenna assembly may be oriented at any angle to fit the site cabling routing needs. Check that all connections between adapters are torqued after cable is installed.

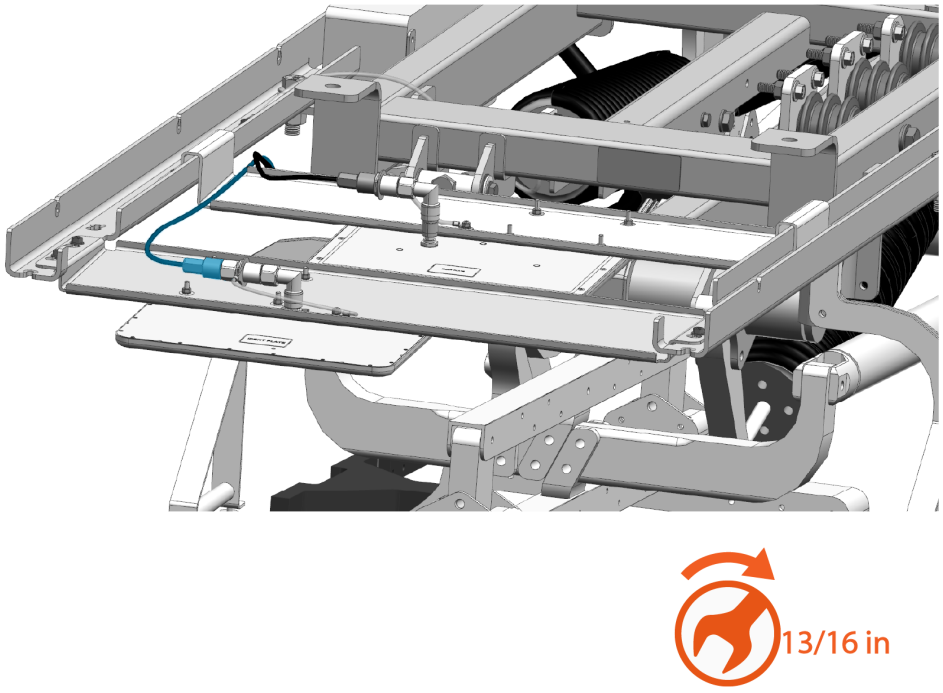

3. Use zip ties to secure the antenna cable so that it is clear of the pantograph during operation.

Connect Status LED Cable

1. Route the status LED cable end to the status LED. Keep the cable clear of high voltage exposed conductors and the pantograph arms through the entire movement range. Coil the cable as needed to take up excess slack.

2. Connect the status LED cable to the short cable attached to the status LED. Hand-tighten.

3. Use a zip tie looped through a hole in the front cover to secure the cable.

4. Use zip ties to secure the cable so that it is clear of the pantograph during operation.

Connect Auxiliary Frame Ground Wire

1. Identify the ground wire connecting from the pantograph frame ground landing.
2. Connect the ground wire to the auxiliary component frame using M6 bolt and nut. Torque to **5.6 Nm (50 in-lb)**.

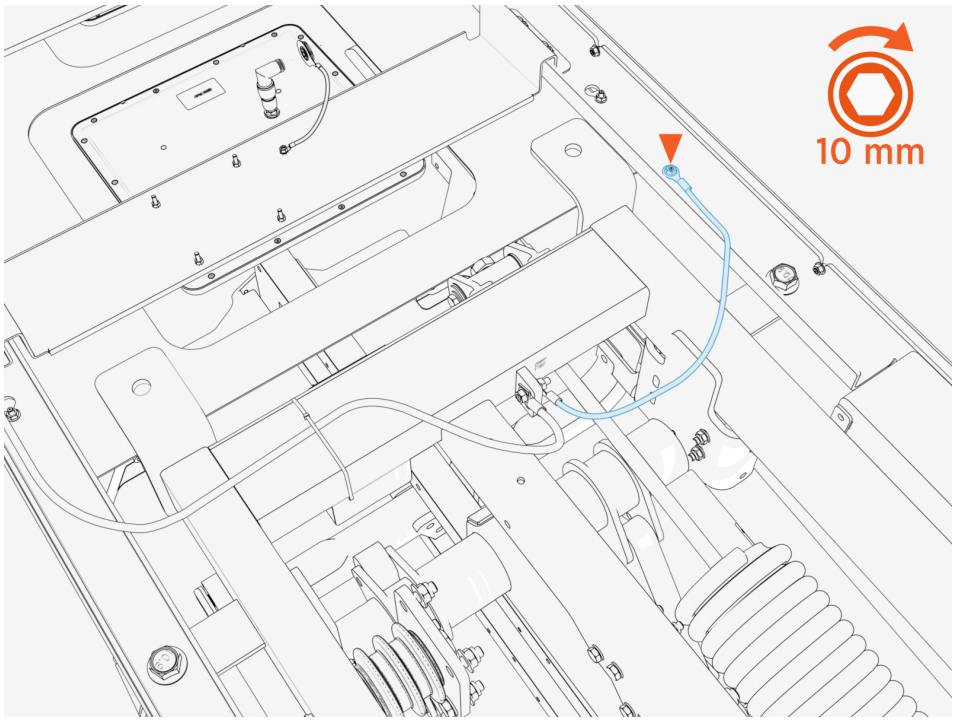

3. Use zip ties to secure the wire so that it is clear of the pantograph during operation. The cable must be kept away from the pantograph arms and charging rails.

Connect PD Controller Wires 11

WARNING: Do not install or service the charging station in inclement weather. If you work in snow, rain, or wind, you must use a weather-proof shelter that covers all boxes and components.

IMPORTANT: Ensure that the installation complies with all applicable codes and ordinances.

IMPORTANT: Keep components out of direct sunlight in a cool area until you install them.

CAUTION: Warranty Limitation

- If the charging station is not installed, commissioned, or serviced by a ChargePoint certified technician using a ChargePoint-approved method, it is *excluded* from all ChargePoint and other warranties and ChargePoint is not responsible.
- You must be a licensed electrician and complete training at chargepoint.com/installers to become ChargePoint certified and to access ChargePoint's web-based installer tools or ChargePoint Installer app.

CAUTION: Use low torque settings when working with power tools during installation or servicing. Over-torquing can damage the equipment.

Wiring Overview

The PD Controller is configured with the following wire connections:

- 120-277 V AC input from the site
- LV DC input, chassis ground, and Ethernet connection from a Power Link 2000
- RF coaxial connection to a Wi-Fi Antenna
- RF coaxial connection to an RFID Antenna

For AC and LV DC input wire quantities, sizes, and terminations, see Wires and Terminations Required for Site.

Wire landing locations within the PD Controller are shown below.

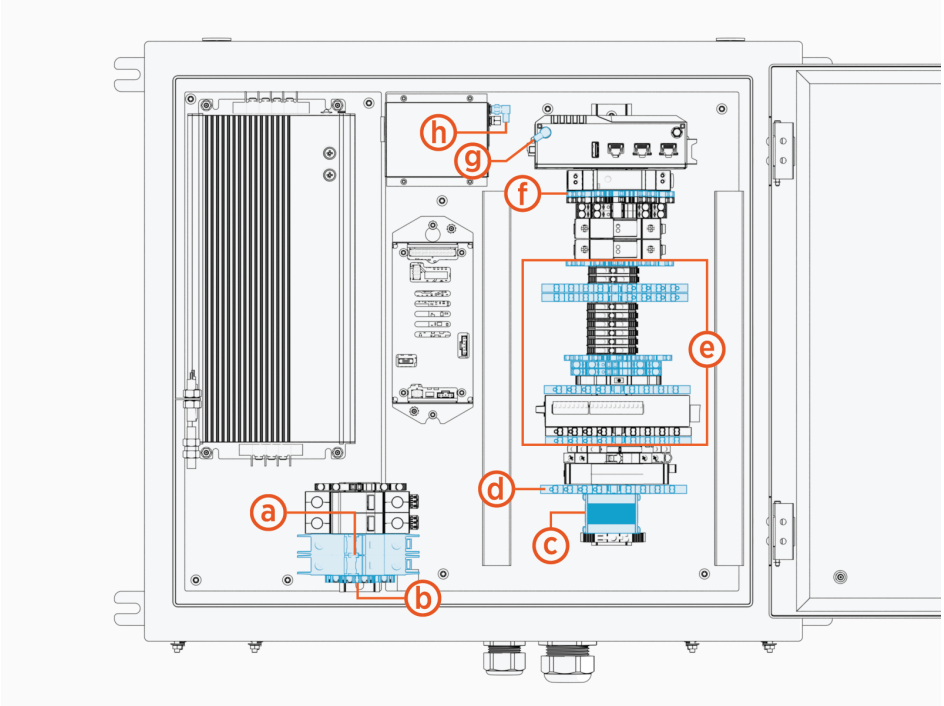

(a) 120-277 V AC input
(b) AC PE
(c) Ethernet input
(d) LV DC input
(e) Controller interface cable
(f) Chassis ground
(g) Wi-Fi antenna
(h) RFID antenna

Parts Needed

To prepare for wiring, find the wire terminal operating tool (shipped in the Auxiliary Components Kit).

Connect AC Input Wires

1. Open the PD Controller enclosure.

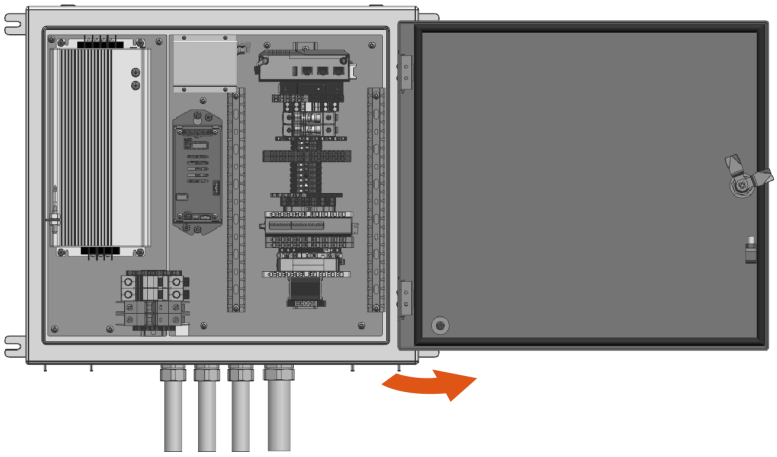

2. Pull and cut the 120-277 V AC wires to length for landing on the AC circuit breaker and ground terminal.

WARNING: The AC wire length inside the enclosure must not exceed 127 mm (5 in). Allowing a longer wire length inside the enclosure leaves a potential for protection circuitry failure and introduces a potential electrical hazard.

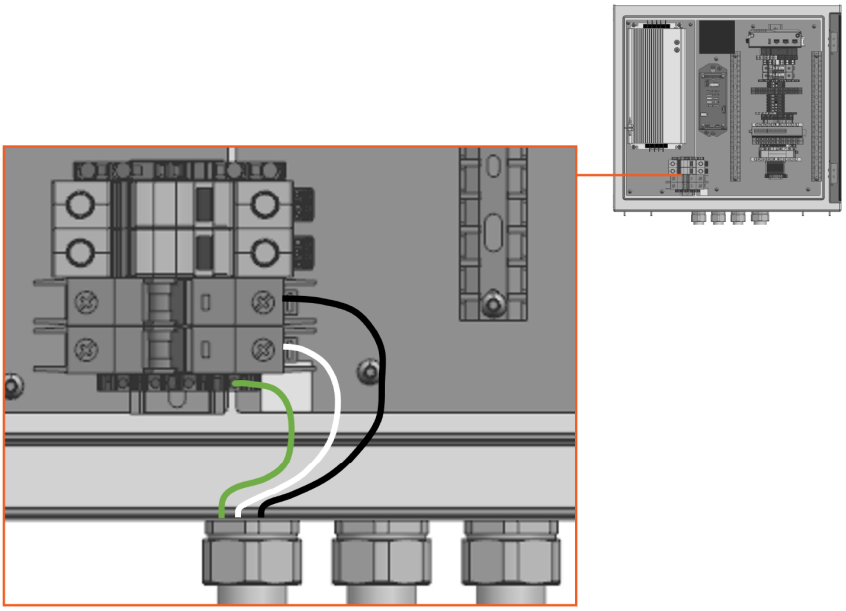

3. Strip the AC wire jackets.

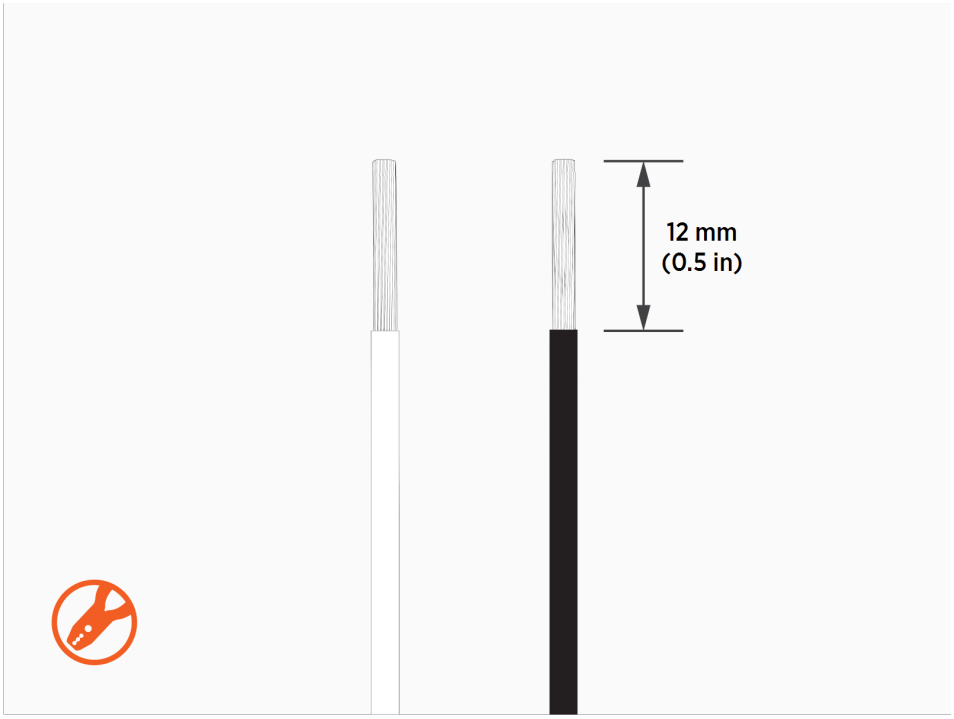

4. Loosen the AC circuit breaker set screws (x2).

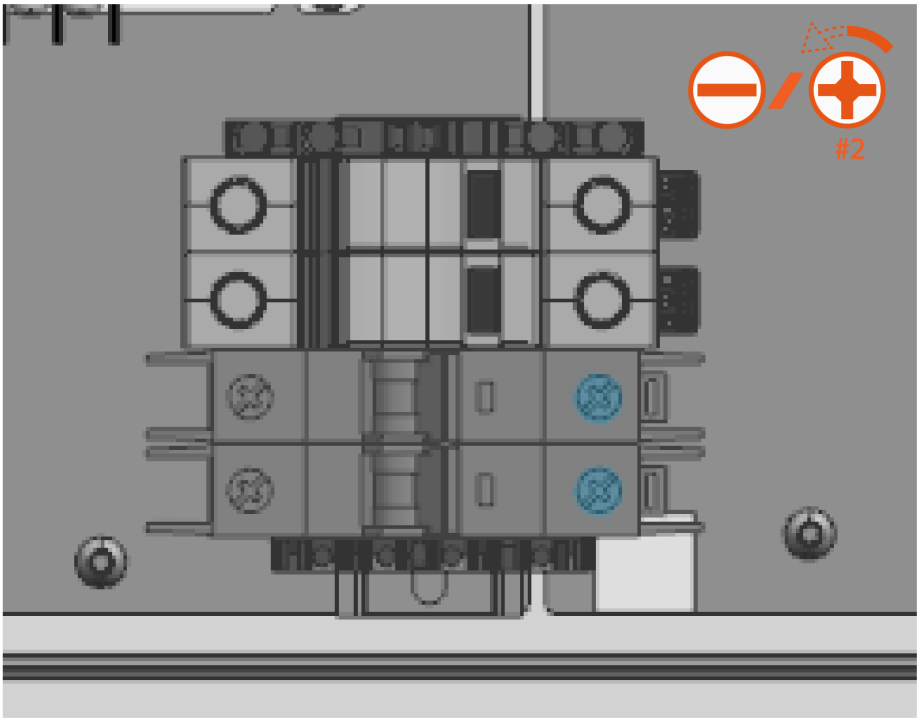

5. Insert the AC wires into the terminals. Insert the live wire into the upper terminal. Insert the neutral wire into the lower terminal.

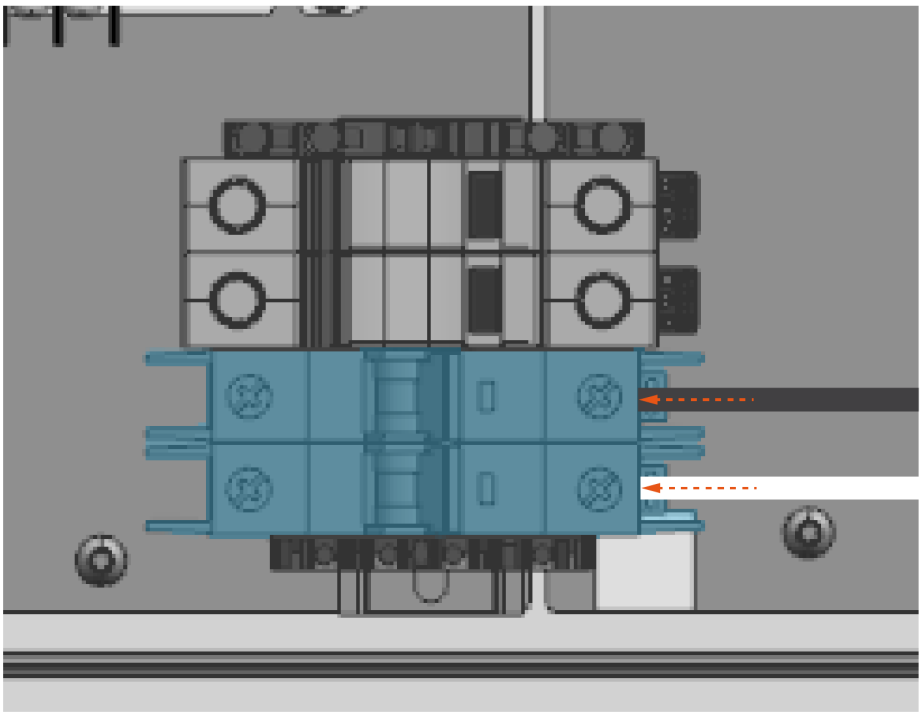

6. Torque the AC circuit breaker set screws (x2) to **2.4 Nm (21.2 in-lb)** for 18-12 AWG wires, **2.8 Nm (24.8 in-lb)** for 10-8 AWG wires, or **4 Nm (35.4 in-lb)** for 6 AWG wires. Push-pull to test the wires are secured.

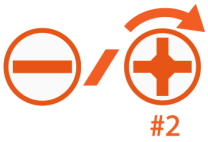

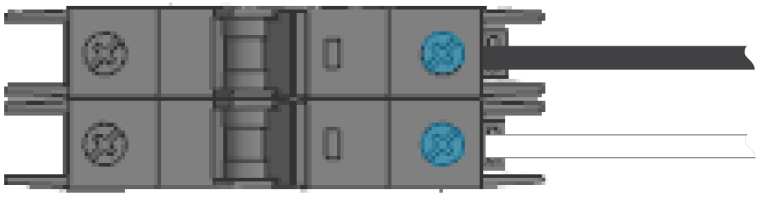

7. Flip the AC circuit breaker switches (x2) to the ON position. The indicator window should display red.

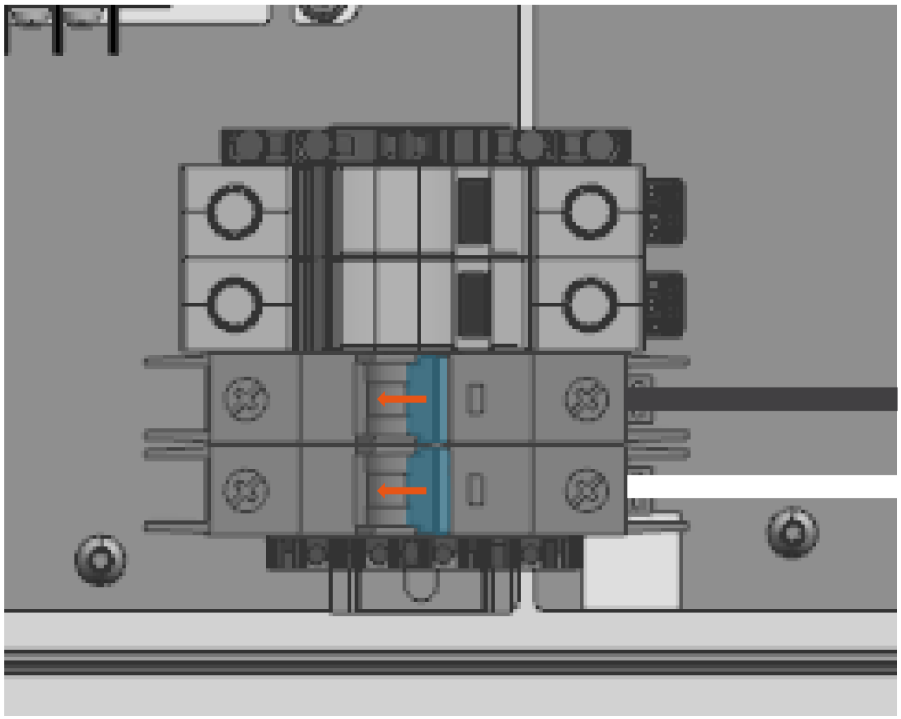

8. Strip the AC PE wire jacket.

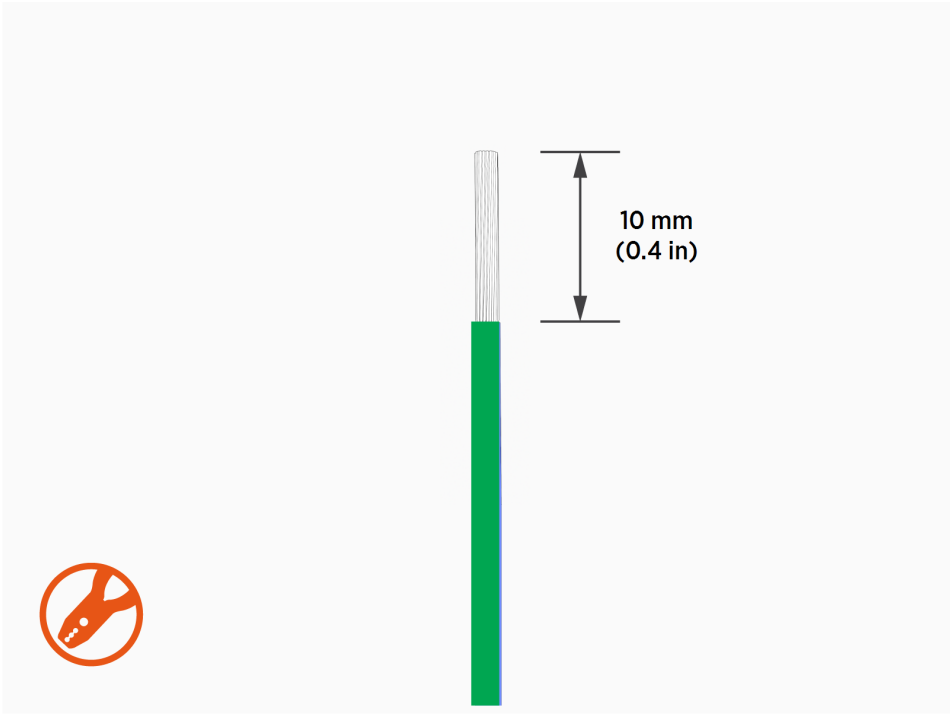

9. Loosen the AC PE terminal set screw.

10. Insert the AC PE wire into the terminal.

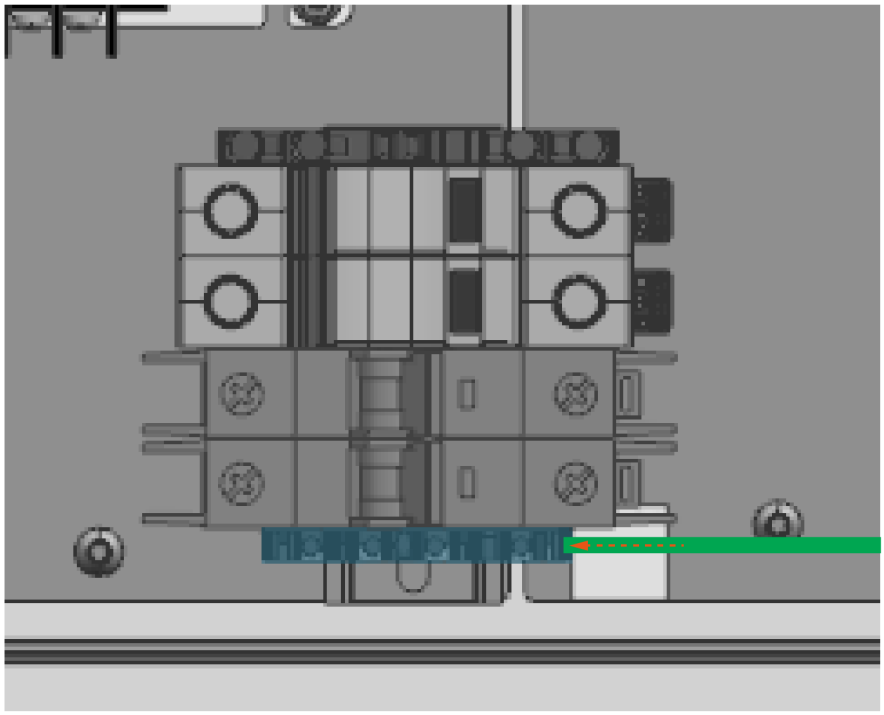

11. Torque the terminal set screw to **1.7 Nm (15 in-lb)**. Push-pull to test the wire is secure.

Connect LV DC and Ethernet Wires

Pull Wires

If not already done, pull the 48 V DC wires, Ethernet cable, and chassis ground wire into the enclosure. These wires connect from the Power Link 2000.

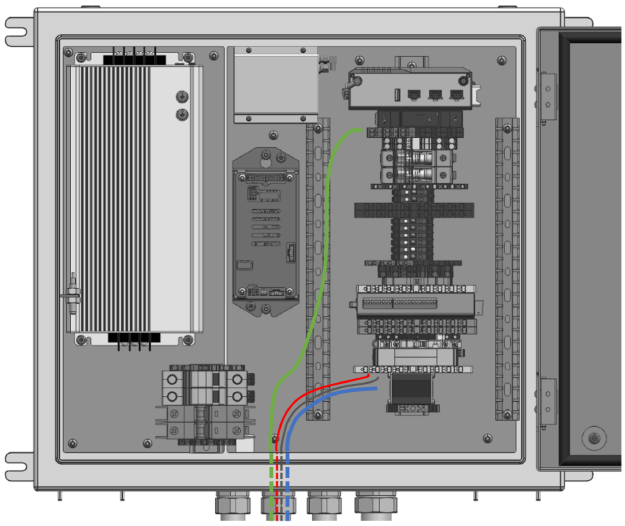

Cut and Connect 48 V DC and Ground Chassis Wires

Wire landing locations

Study the table and diagram below to identify wire landing locations. Also note the wire strip length given.

Wire	Terminal Block ID	Port Number	Wire Strip Length
48 V DC positive (+)	TB14	1A	10 mm (0.4 in)
48 V DC negative (-)	TB14	2A	
Chassis ground	TB2	3	12 mm (0.5 in)

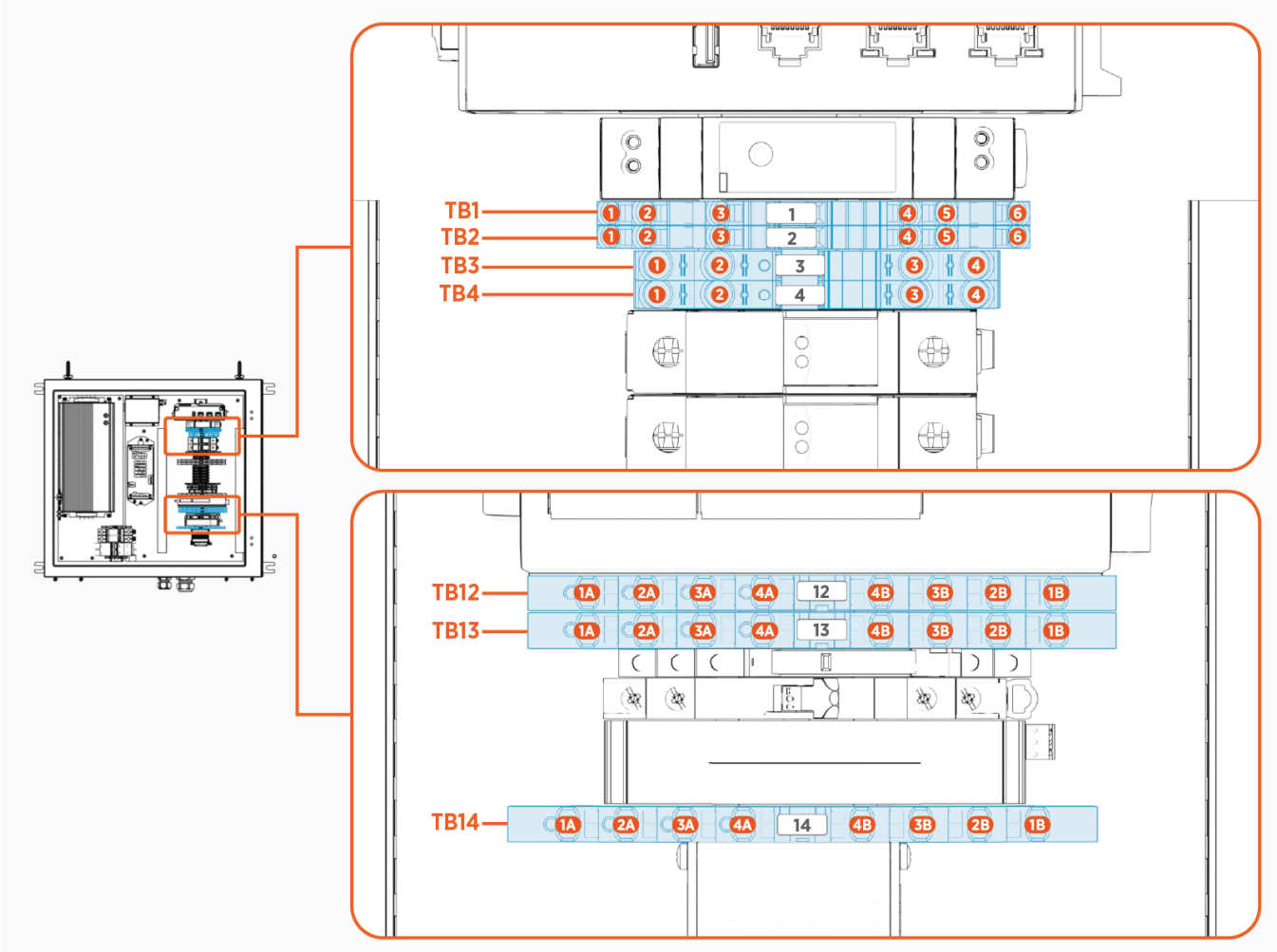

Connect wires

Follow the procedure below to connect each 48 V DC and chassis ground wire:

1. Route and cut the wire to length for landing on its designated terminal.
2. Strip the wire end.
3. Insert the wire into its designated terminal port.
    - For TB14, use the wire terminal operating tool to facilitate wire insertion.

      CAUTION: Before inserting a wire into the terminal, the operating tool must be fully inserted to release the latch mechanism. Otherwise the terminal block may be damaged.

    - For TB2, use a 3.5 mm or smaller flathead screwdriver to release the port clamp for wire insertion.
4. Push-pull to test the wire is secure.

Connect Ethernet Cable

1. Route the Ethernet (Cat6 STP) cable to the Ethernet surge suppressor and trim to length. Allow for a service loop.

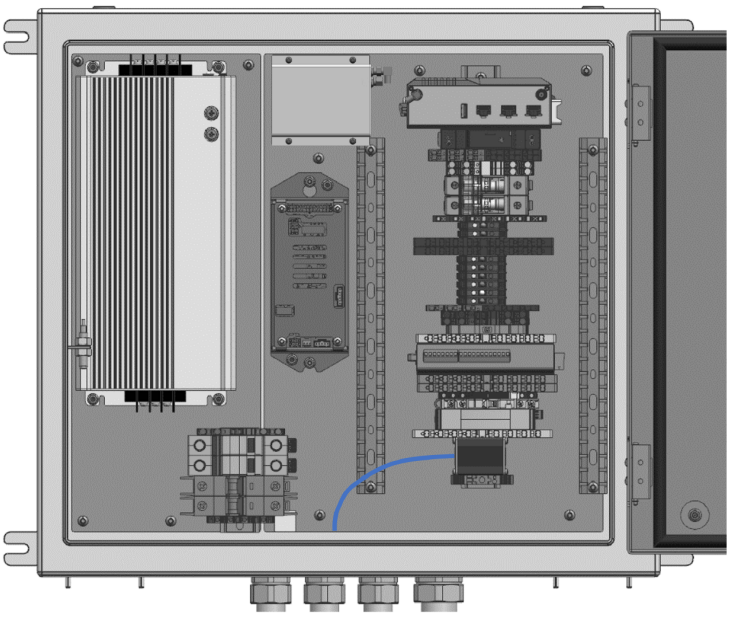

2. Field crimp a shielded RJ45 connector onto the Ethernet cable. Use straight-through T568B pattern.

IMPORTANT: Do not ground the shield at this end of the cable. Ground the shield at the end of the cable that connects to the Power Link 2000.

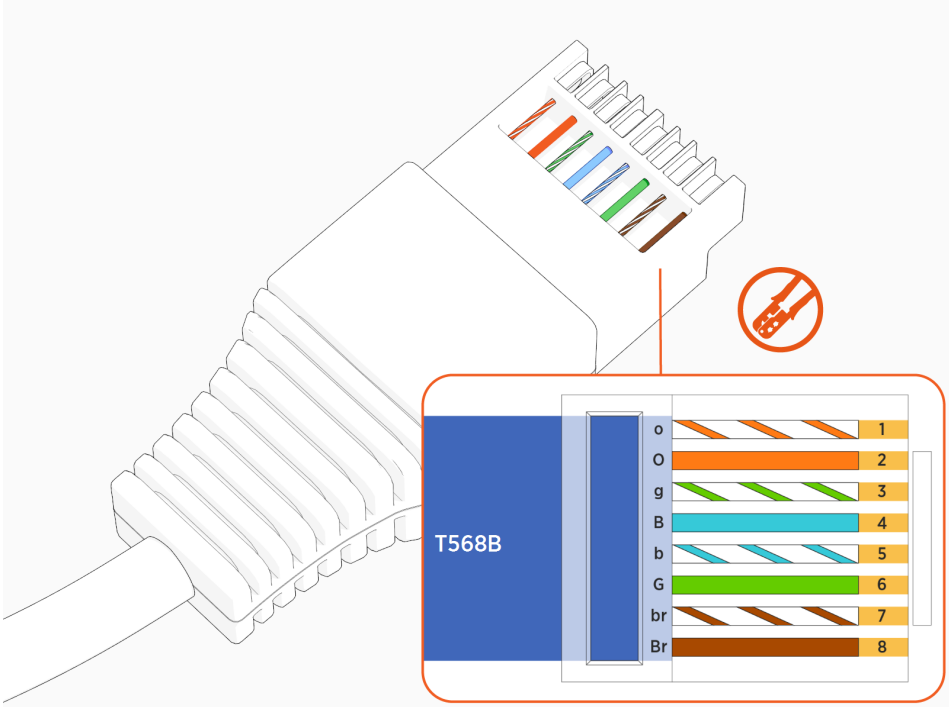

3. Test the Ethernet cable for functionality.

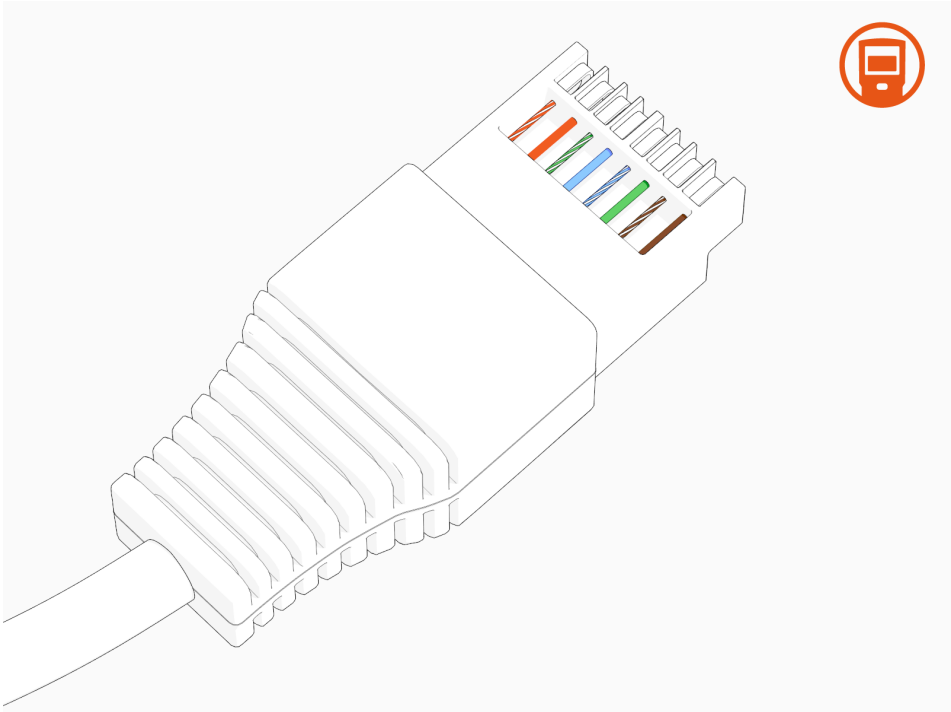

4. Connect the cable to the Ethernet surge suppressor.

   Note: To establish a secure connection, the RJ45 connector latch must click into the surge suppressor port.

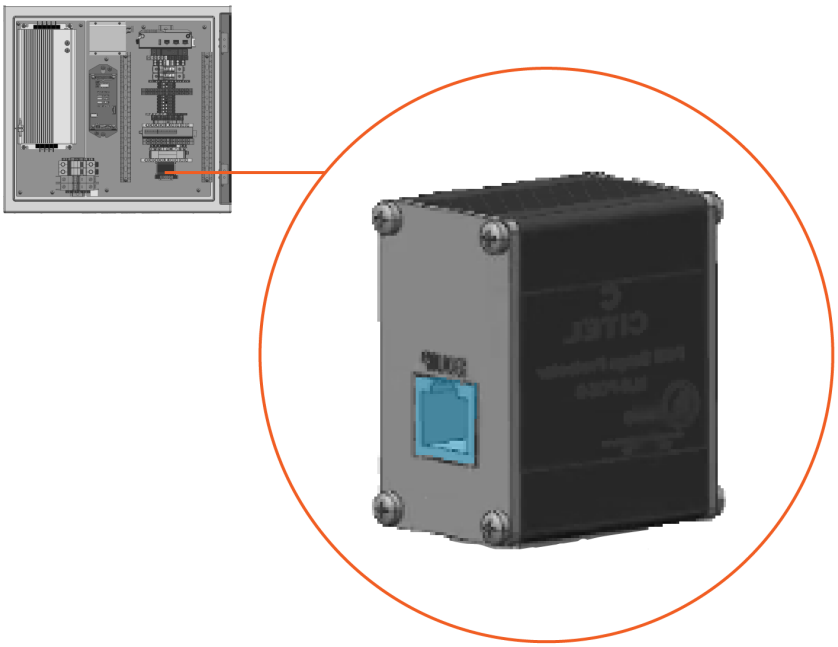

Connect Antenna Cables

1. Route the Wi-Fi and RFID antenna cables into the PD Controller through the 3/4 in (21 mm) NPT cable gland.

   Note: Feeding the RP-SMA connectors through the cable gland may require care due to a snug fit. See Appendix: RFID and Wi-Fi Antenna Cable Reference for recommended technique.

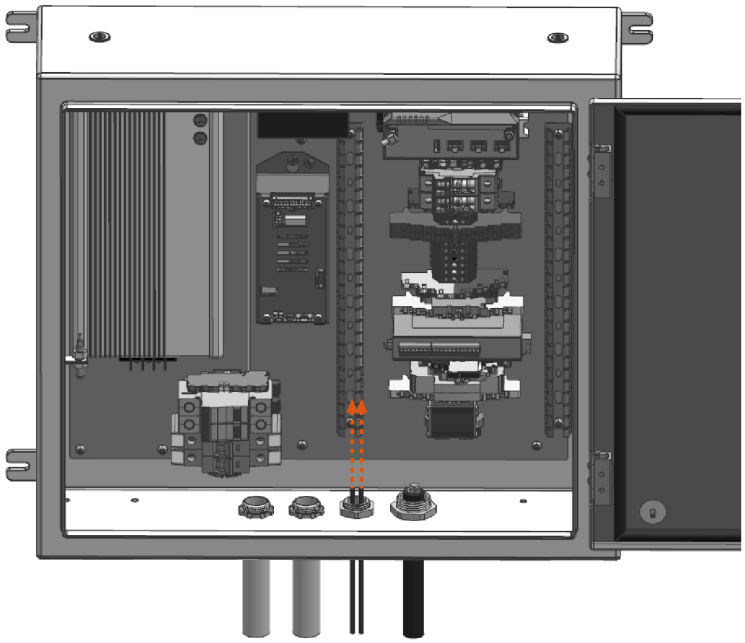

2. Coil the cables outside the enclosure as needed to take up excess slack.

IMPORTANT:

- Do not coil the antenna cables within the PD Controller.
- If the cables are already connected at the antennas, you may need to disconnect the cables from the antennas to take up excess cable slack at the antennas and then reconnect the cables. See Connect Auxiliary Component Cables.

CAUTION: The LMR-240 antenna cables shipped with Pantograph Down 2000 have a one-time bend radius of 19 mm (0.75 in) and repeated bend radius of 63 mm (2.5 in). Do not exceed the bend radius or the cable may be damaged and the system may not operate. If using an LMR-240 equivalent cable, do not exceed the bend radius limits for the cable type used.

3. Connect the Wi-Fi cable to the Wi-Fi Access Point. Rotate the right-angle adapter as needed to facilitate the connection. Torque to **0.45 Nm (4 in-lb)**.

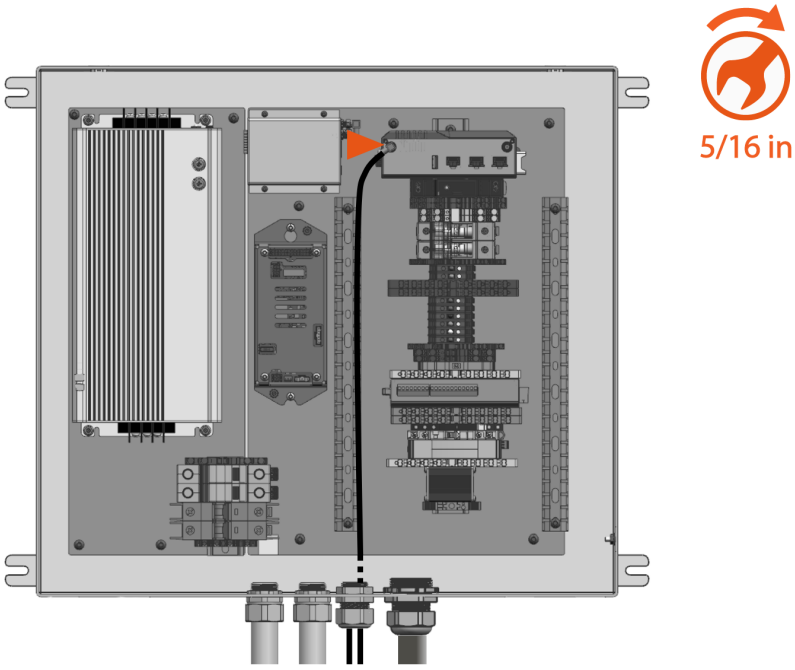

4. Connect RFID cable to the RFID Reader. Rotate the right-angle adapter as needed to facilitate the connection. Torque to **0.45 Nm (4 in-lb)**.

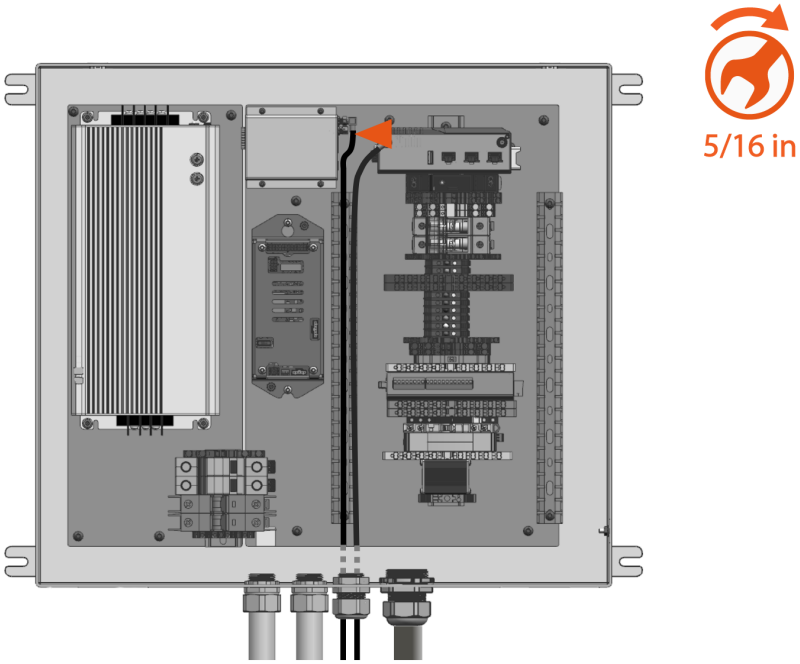

5. Torque the right-angle adapters to **0.45 Nm (4 in-lb)**.

6. Tighten the antenna cable gland. Torque the cap to **4.5 Nm (40 in-lb)**. Torqe the nut to **7.9 Nm (70 in-lb)**.

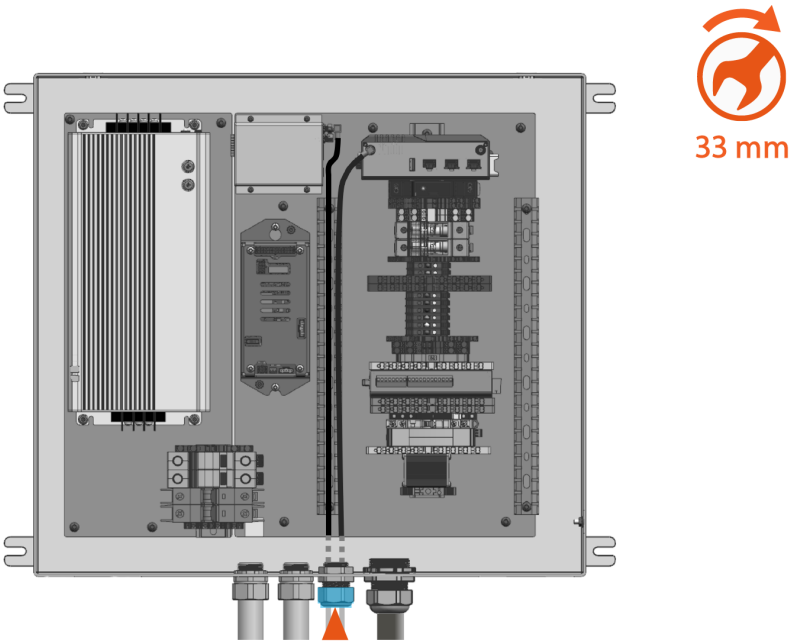

Connect Controller Interface Cable Wires

Prepare for Wire Connection

1. Route the controller interface cable into the PD Controller enclosure through the 1-1/4 in NPT cable gland.

IMPORTANT: The controller interface cable may not coil or bunch within the enclosure. All cable wires must be cut to length for routing directly to the landing terminals, without excess wire length.

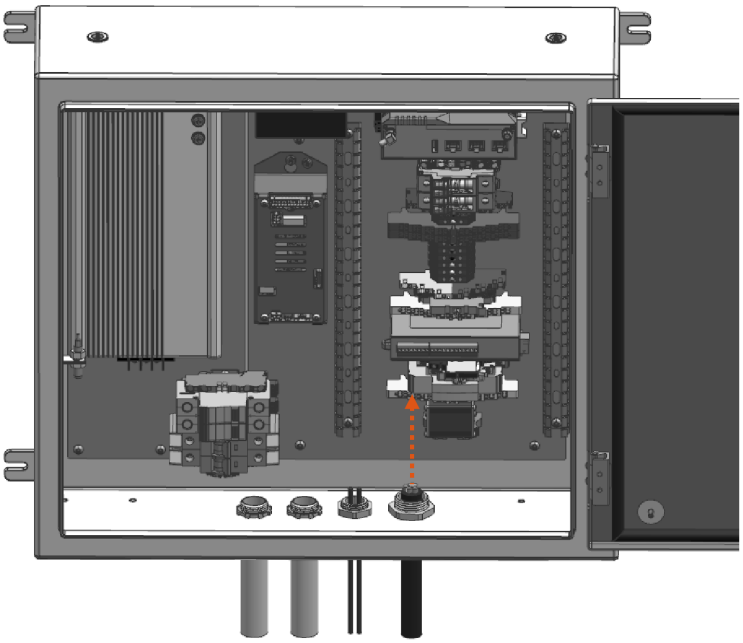

2. Familiarize yourself with the system cables bundled within the controller interface cable. See cable cross-section provided below. For more detail see Controller Interface Cable Schunk SLS 201.102.

(a) Pantograph rest sensor cable
(b) Pantograph control pilot cable
(c) Pantograph control cable
(d) Status LED cable

Connect Pantograph Control Cable Wires

Wire landing locations

Study the table and diagram below to identify wire landing locations. Also note the wire strip length given.

Wire	Wire Color	Wire Gauge	Terminal Block ID	Port Number	Wire Strip Length
Pantograph low current 24 V	Red/white	20 AWG (0.5 mm^2)	TB9	4	13 mm (0.5 in)
Pantograph motor GND	Black	14 AWG (2.5 mm^2)	TB8	6	12 mm (0.5 in)
Pantograph high current GND	Black	16 AWG (1.5 mm^2)	TB8	5	12 mm (0.5 in)
Pantograph low current GND	Black	20 AWG (0.5 mm^2)	TB8	4	12 mm (0.5 in)
Pantograph high current 24 V	Red	14 AWG (2.5 mm^2)	TB10	4	13 mm (0.5 in)
Raised	Blue	20 AWG (0.5 mm^2)	TB11	4B	10 mm (0.4 in)
Lowered	Yellow	20 AWG (0.5 mm^2)	TB11	3B	10 mm (0.4 in)
Request raise	Blue/white	20 AWG (0.5 mm^2)	TB13	4B	10 mm (0.4 in)
Request lower	Yellow/white	20 AWG (0.5 mm^2)	TB13	3B	10 mm (0.4 in)

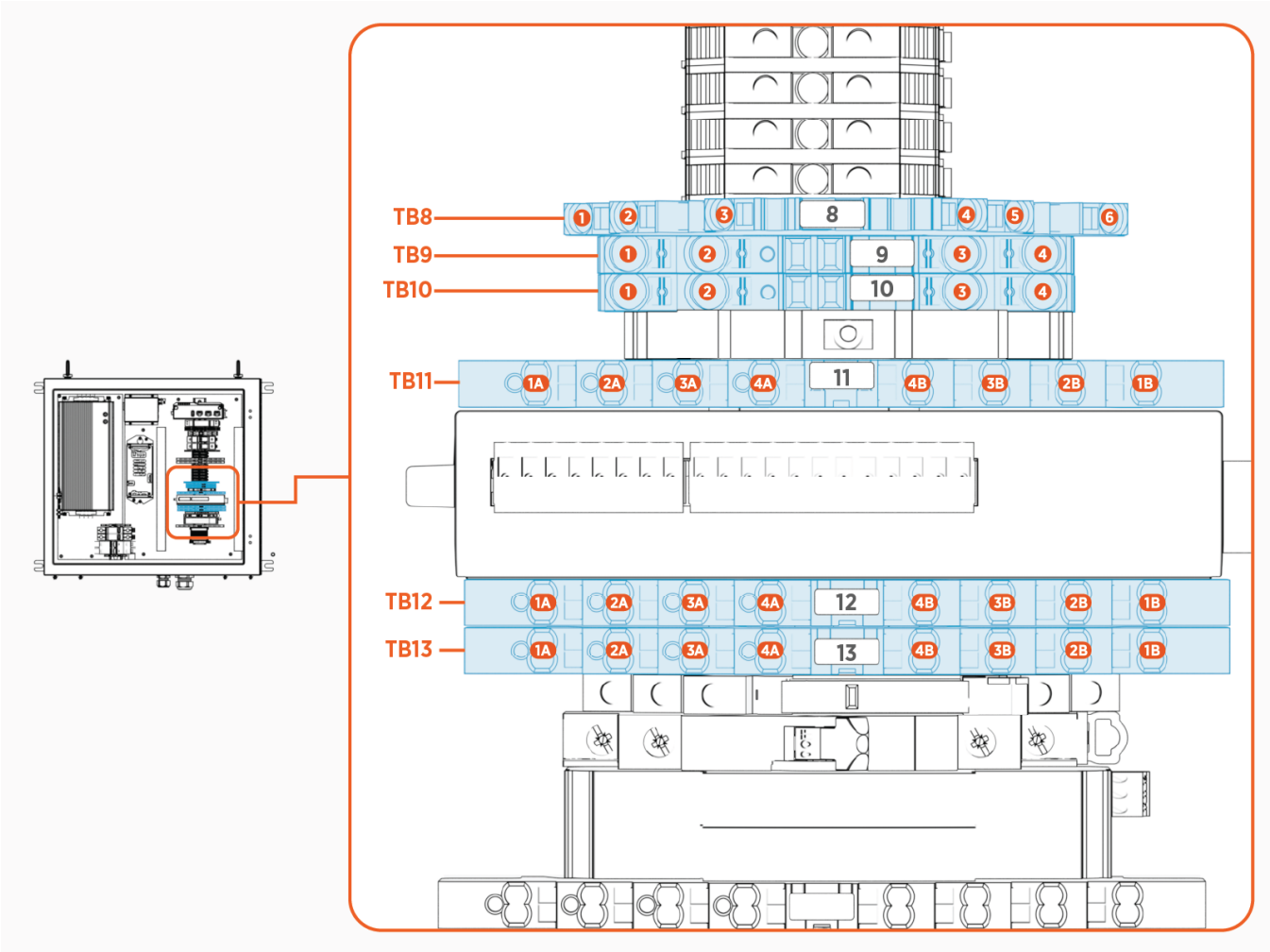

Note: Each terminal ships with wires that are factory-installed on one half of the terminal. The field-installed wires shall install on the opposite half of the terminal, mirroring the factory-installed wires in terms of port position and wire color.

Connect wires

Follow the procedure below to connect each individual pantograph control cable wire:

1. Route and cut the wire to length for landing on its designated terminal.
2. Strip the wire end.
3. Install wire ferrule (option).

4. Insert the wire into its designated terminal port.
    - For TB11 and TB13, use the wire terminal operating tool to facilitate wire insertion.

CAUTION: Before inserting a wire or ferrule into the terminal, the operating tool must be fully inserted to release the latch mechanism. Otherwise the terminal block may be damaged.

    - For TB8, TB9, and TB10, use a 3.5 mm or smaller flathead screwdriver to release the port clamp for wire insertion, or push ferrule termination into the terminal block port.
5. Push-pull to test the wire is secure.

IMPORTANT: After completing the connection of all wires, visually inspect the wiring at each of the terminals. Field-installed wires at a given terminal should mirror the factory-installed wires in terms of port position and wire color.

Connect Pantograph Rest Sensor Cable Wires

Wire landing locations

Study the table and diagram below to identify wire landing locations. Also note the wire strip length given.

Wire	Wire Color	Wire Gauge	Terminal Block ID	Port Number	Wire Strip Length
Rest signal	Green/blue	20 AWG (0.5 mm^2)	TB11	1B	10 mm (0.4 in)
Rest 24 V	Red/white	20 AWG (0.5 mm^2)	TB9	3	13 mm (0.5 in)
Rest GND	Black	20 AWG (0.5 mm^2)	TB8	3	12 mm (0.5 in)

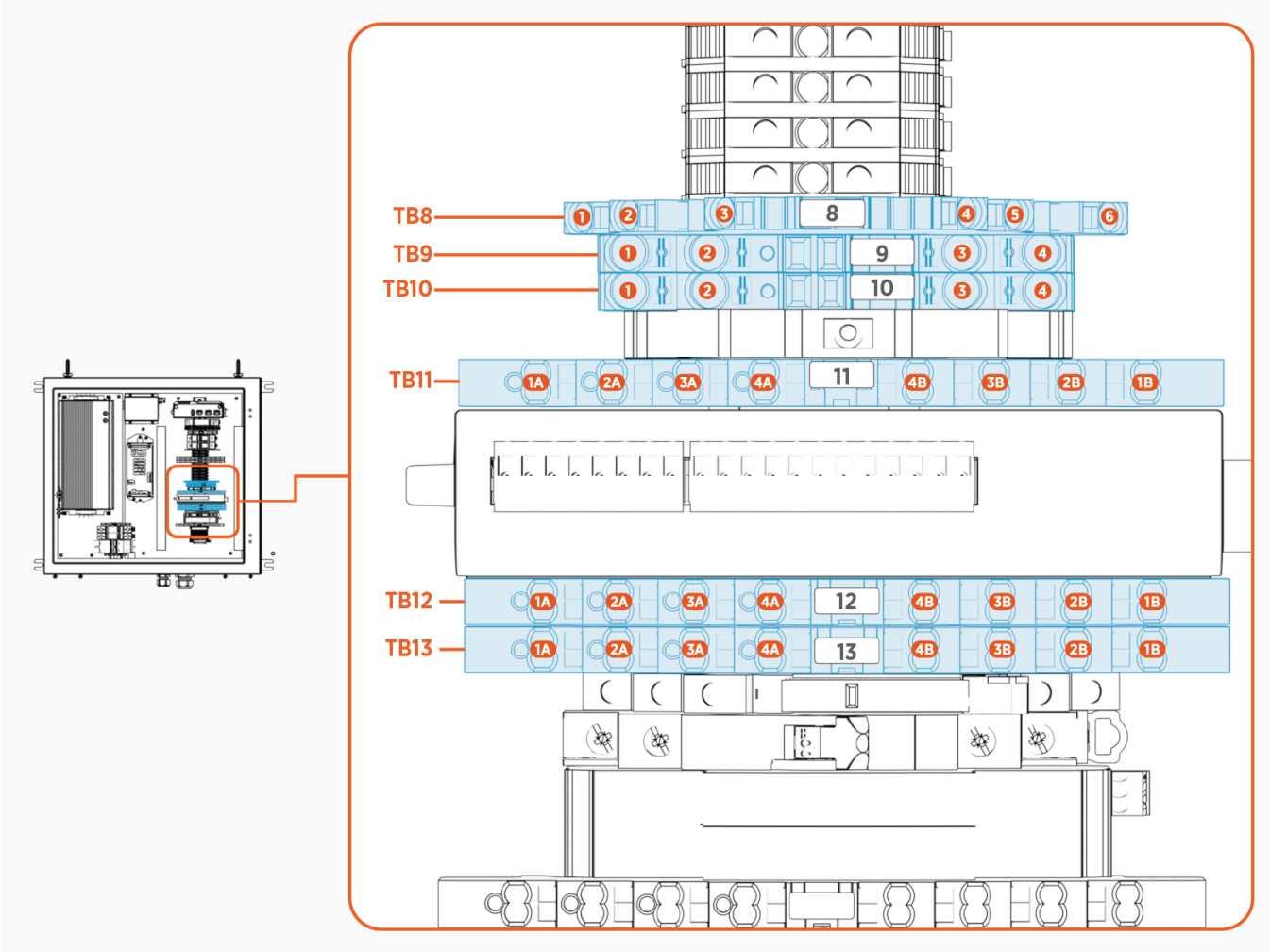

Note: Each terminal ships with wires that are factory-installed on one half of the terminal. The field-installed wires shall install on the opposite half of the terminal, mirroring the factory-installed wires in terms of port position and wire color.

Connect wires

Follow the procedure below to connect each individual rest sensor cable wire:

1. Route and cut the wire to length for landing on its designated terminal.
2. Strip the wire end.
3. Install wire ferrule (option).
4. Insert the wire into its designated terminal port.
    - For TB11, use the wire terminal operating tool to facilitate wire insertion.

      CAUTION: Before inserting a wire or ferrule into the terminal, the operating tool must be fully inserted to release the latch mechanism. Otherwise the terminal block may be damaged.

    - For TB8 and TB9, use a 3.5 mm or smaller flathead screwdriver to release the port clamp for wire insertion, or push ferrule termination into the terminal block port.
5. Push-pull to test the wire is secure.

IMPORTANT: After completing the connection of all wires, visually inspect the wiring at each of the terminals. Field-installed wires at a given terminal should mirror the factory-installed wires in terms of port position and wire color.

Connect Pantograph Control Pilot Cable Wires

Wire landing locations

Study the table and diagram below to identify wire landing locations. Also note the wire strip length given.

Wire	Wire Color	Wire Gauge	Terminal Block ID	Port Number	Wire Strip Length
Control pilot	White/brown	20 AWG (0.5 mm^2)	TB5	1B	12 mm (0.5 in)
Control pilot shield	Brown/black	20 AWG (0.5 mm^2)	TB5	2B	12 mm (0.5 in)

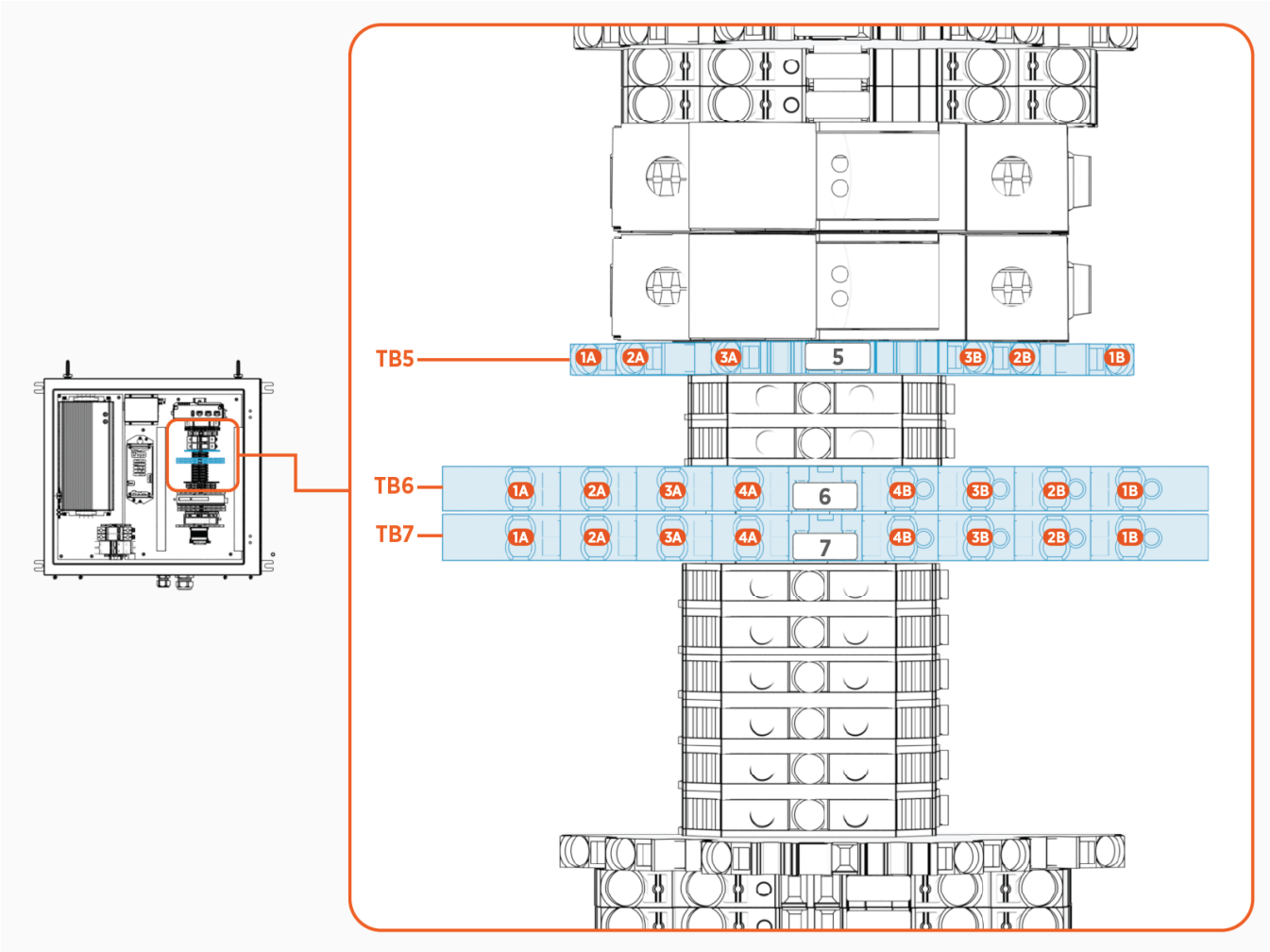

Note: Each terminal ships with wires that are factory-installed on one half of the terminal. The field-installed wires shall install on the opposite half of the terminal, mirroring the factory-installed wires in terms of port position and wire color.

Connect wires

Follow the procedure below to connect each individual control pilot cable wire:

1. Route and cut the wire to length for landing on its designated terminal.
2. Strip the wire end.
3. Install wire ferrule (option).
4. Insert the wire into its designated terminal port. Use a 3.5 mm or smaller flathead screwdriver to release the port clamp for wire insertion, or push ferrule termination into the terminal block port.
5. Push-pull to test the wire is secure.

IMPORTANT: After completing the connection of all wires, visually inspect the wiring at each of the terminals. Field-installed wires at a given terminal should mirror the factory-installed wires in terms of port position and wire color.

Connect Status LED Cable Wires

Wire landing locations

Study the table and diagram below to identify wire landing locations. Also note the wire strip length given.

Wire Color	Wire Gauge	Terminal Block ID	Port Number	Wire Strip Length
Orange	24 AWG (0.2 mm^2)	TB6	1B	10 mm (0.4 in)
White/orange	24 AWG (0.2 mm^2)	TB6	2B	10 mm (0.4 in)
Brown	24 AWG (0.2 mm^2)	TB6	3B	10 mm (0.4 in)
White/brown	24 AWG (0.2 mm^2)	TB6	4B	10 mm (0.4 in)
Blue	24 AWG (0.2 mm^2)	TB7	1B	10 mm (0.4 in)
White/blue	24 AWG (0.2 mm^2)	TB7	2B	10 mm (0.4 in)
Green	24 AWG (0.2 mm^2)	TB7	3B	10 mm (0.4 in)
White/green	24 AWG (0.2 mm^2)	TB7	4B	10 mm (0.4 in)

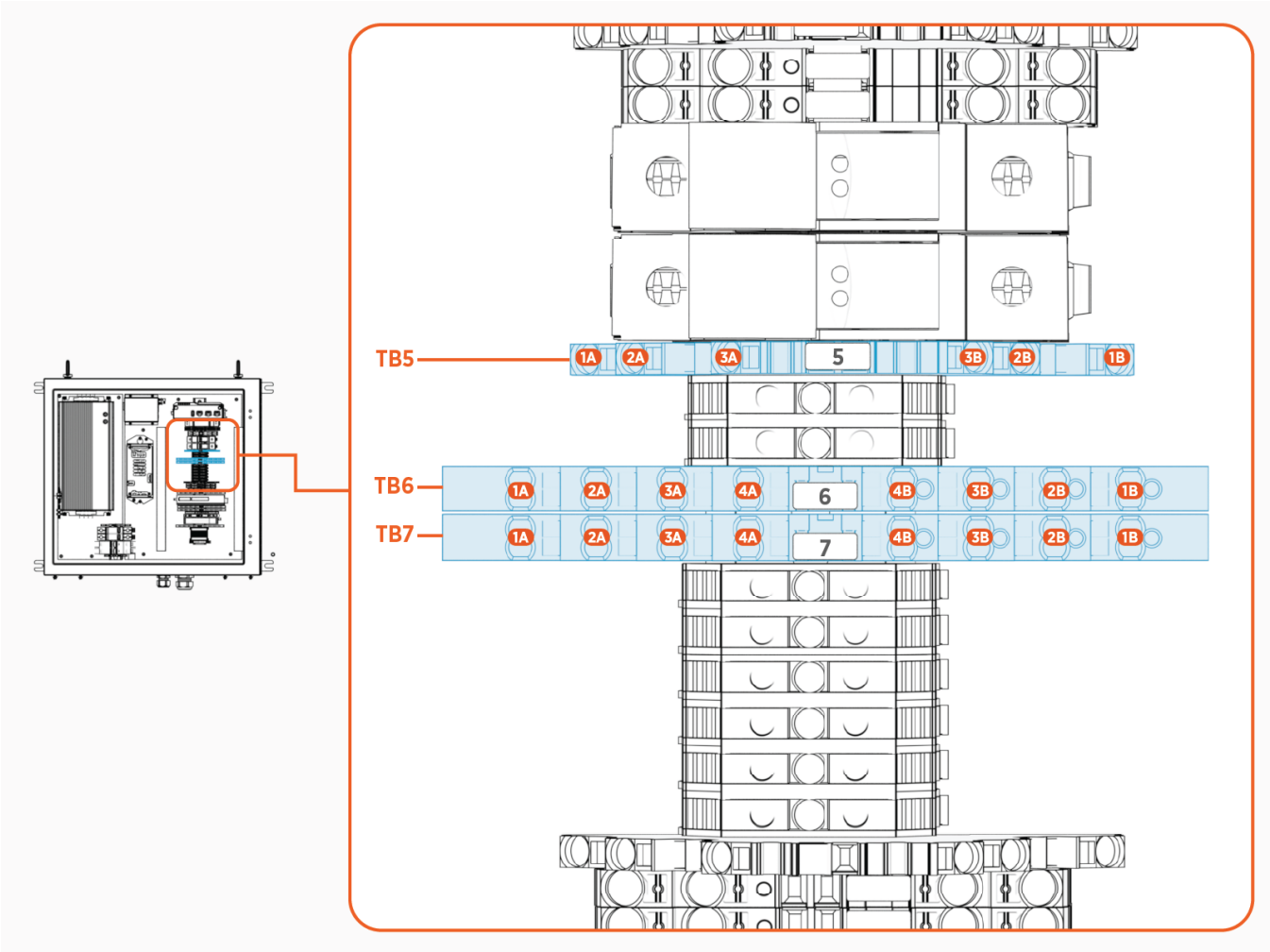

Note: Each terminal ships with wires that are factory-installed on one half of the terminal. The field-installed wires shall install on the opposite half of the terminal, mirroring the factory-installed wires in terms of port position and wire color.

Connect wires

Follow the procedure below to connect each individual status LED cable wire:

1. Route and cut the wire to length for landing on its designated terminal.
2. Strip the wire end.
3. Install wire ferrule (option).
4. Insert the wire into its designated terminal port. Use the wire terminal operating tool to assist wire insertion.

> **CAUTION:** Before inserting a wire or ferrule into the terminal, the operating tool must be fully inserted to release the latch mechanism. Otherwise the terminal block may be damaged.

5. Push-pull to test the wire is secure.

IMPORTANT: After completing the connection of all wires, visually inspect the wiring at each of the terminals. Field-installed wires at a given terminal should mirror the factory-installed wires in terms of port position and wire color.

Secure Controller Interface Cable

Tighten the cable gland. Torque the cap to **4.5 Nm (40 in-lb)**. Torque the nut to **10.2 Nm (90 in-lb)**.

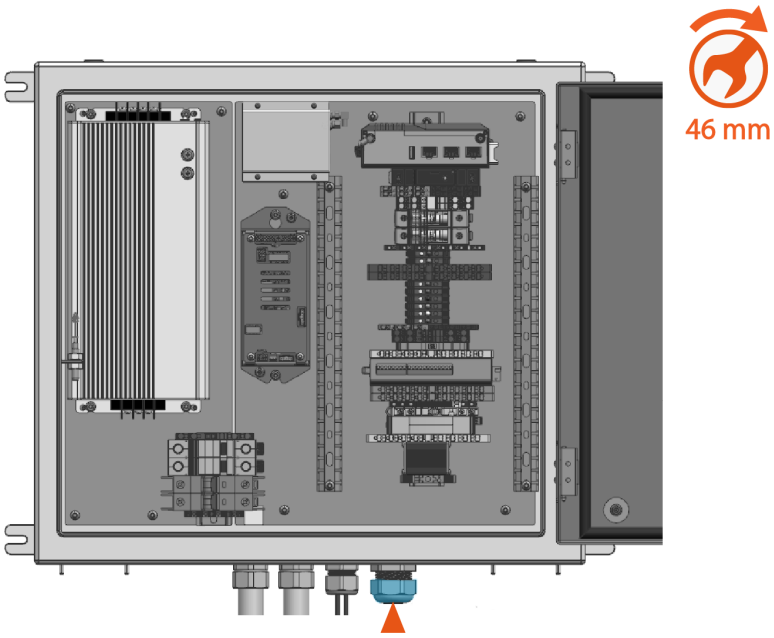

Connect Mast Wires 12

WARNING: Do not install or service the charging station in inclement weather. If you work in snow, rain, or wind, you must use a weather-proof shelter that covers all boxes and components.

IMPORTANT: Ensure that the installation complies with all applicable codes and ordinances.

IMPORTANT: Keep components out of direct sunlight in a cool area until you install them.

CAUTION: Warranty Limitation

- If the charging station is not installed, commissioned, or serviced by a ChargePoint certified technician using a ChargePoint-approved method, it is *excluded* from all ChargePoint and other warranties and ChargePoint is not responsible.
- You must be a licensed electrician and complete training at chargepoint.com/installers to become ChargePoint certified and to access ChargePoint's web-based installer tools or ChargePoint Installer app.

CAUTION: Use low torque settings when working with power tools during installation or servicing. Over-torquing can damage the equipment.

Parts Needed

To prepare for wiring, find the following parts from the Mast Components Kit:

- M8 bolt and flange nut (x1 each)
- 3/8 in flange bolt, flange nut, external tooth washer (x5 each)

Wiring Overview

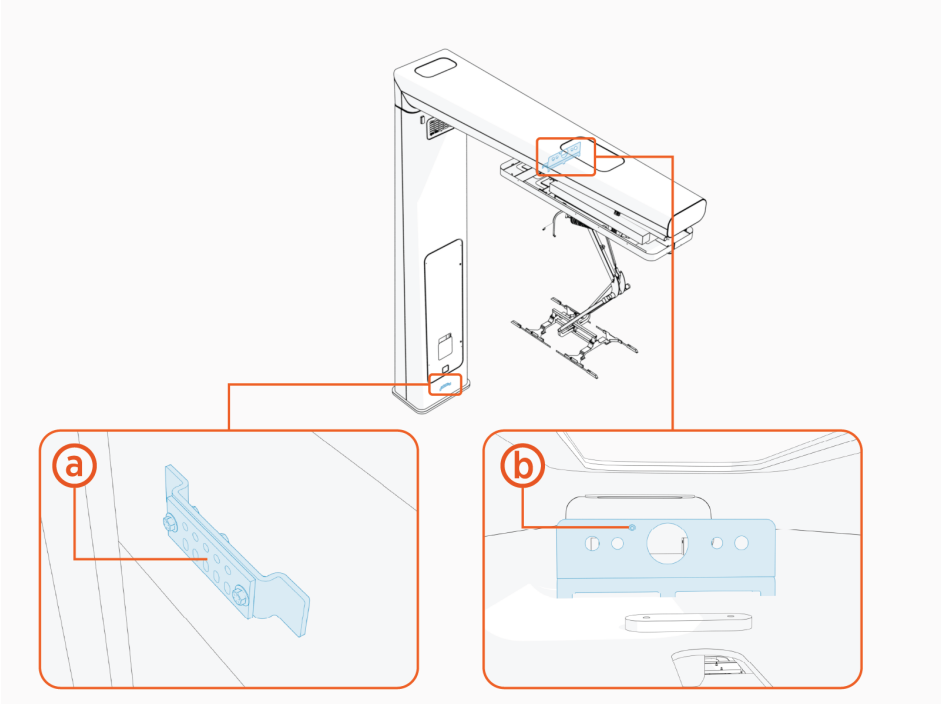

The Pantograph Down Mast is equipped with a ground bar **(a)** located at the base of the pole, on the inside wall of the pole. This location is used to land ground wires connecting to:

- Grounding rods (if used)
- Power Link 2000

There is a second grounding point **(b)** located inside the arm of the mast, which is used to ground the pantograph frame to the mast.

For wire quantities, sizes, and terminations, see Wires and Terminations Required for Site.

Connect Wires at Mast Ground Bar

If grounding rods were installed for the mast, follow the procedure below to prepare the ground rod wires.

1. If mast grounding rods were installed, follow grounding rod manufacturer's instructions for connecting ground wires to the rods.

2. Identify the ground wire connecting from the Power Link 2000. See Power Link 2000 Wire Overview.
3. Cut all ground wires to length for landing on the mast ground bar. See Wiring Overview for landing location. Take into account the length of the lug that will terminate the wire.
4. Prepare the wires:

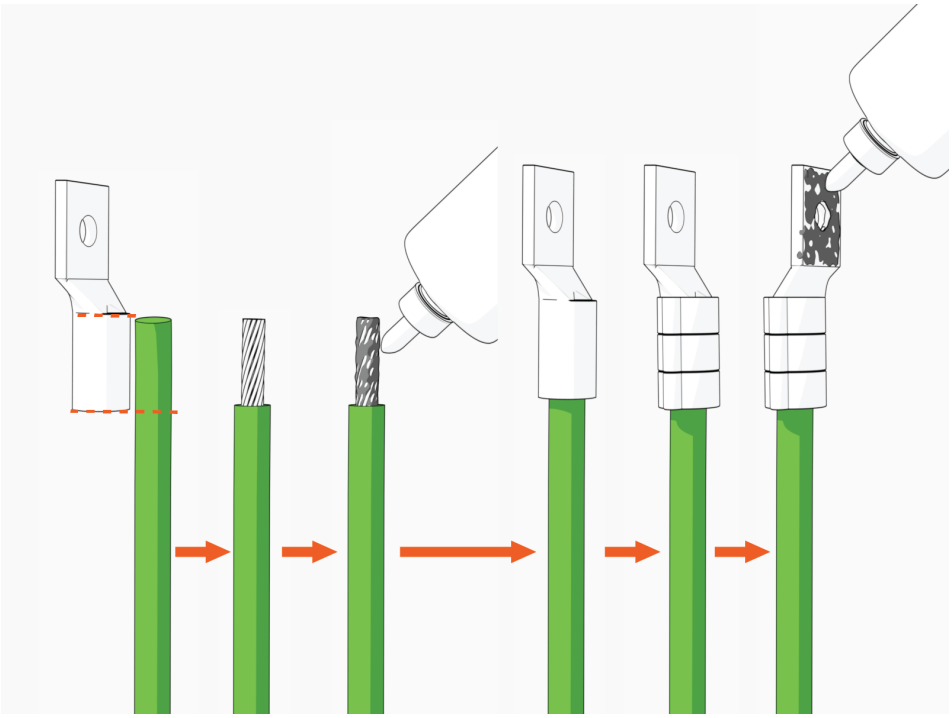

   a. Mark the lug's barrel height on the wire terminal.
   b. Strip the jacket on the marked terminal. Use a suitable wire stripper, such as Klein tool.
   c. If recommended by the wire manufacturer or local code, apply an anti-oxidant joint compound to the stripped wire material to make a gastight joint with the lug.
   d. Insert the stripped terminal into the lug's barrel and crimp it. Use a suitable lug crimping tool and/or die recommended by the lug manufacturer.
   e. Apply dielectric grease to the lug's tongue surface that comes in contact with the bus bars.

5. Connect ground wires to the mast ground bar. Use 3/8 in flange bolt, flange nut, and external tooth washer to fasten each wire. Torque fasteners to **19 Nm (14 ft-lb)**.

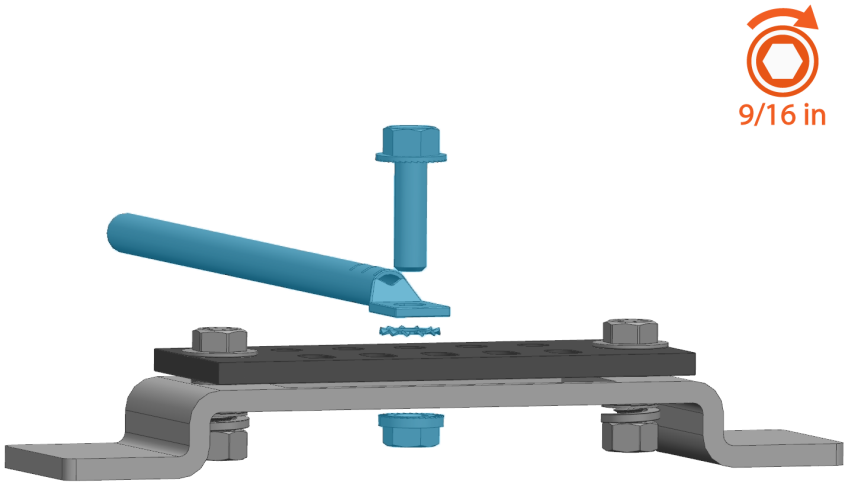

Connect Wire at Mast Arm

1. Locate the conduit bracket in the mast arm.

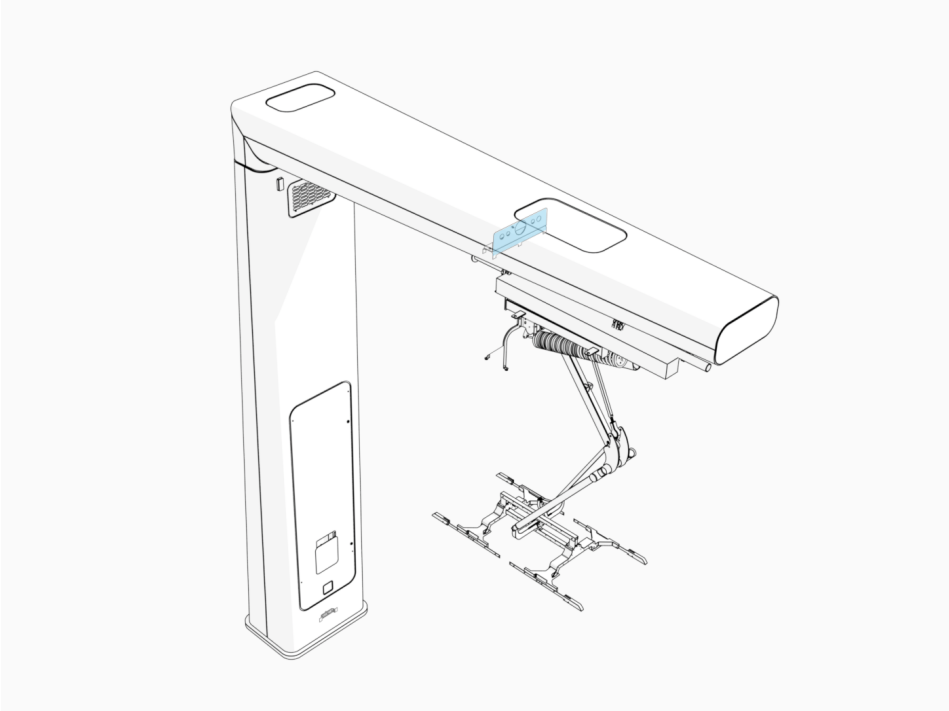

2. Drill a hole into the conduit bracket. The wire will connect at this hole.

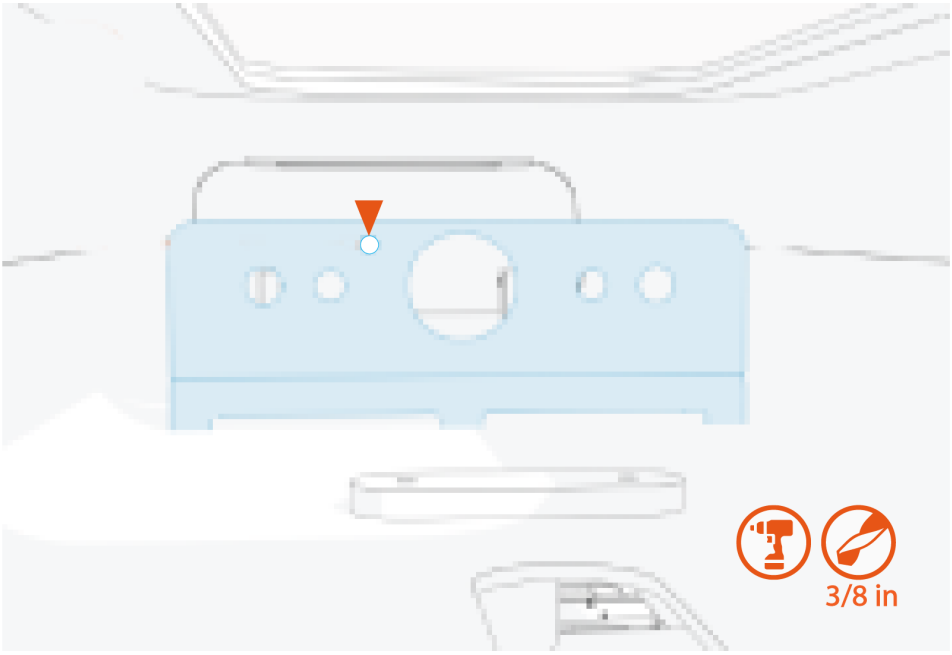

3. Find the ground wire connecting from the pantograph frame. See Schunk SLS 201.102 Wiring Overview.
4. Cut ground wire to length for landing at the conduit bracket.
5. Install a ring terminal on the wire end.
6. Connect the wire to the conduit bracket with M8 bolt and flange nut. Torque fasteners to **15 Nm (133 in-lb)**.

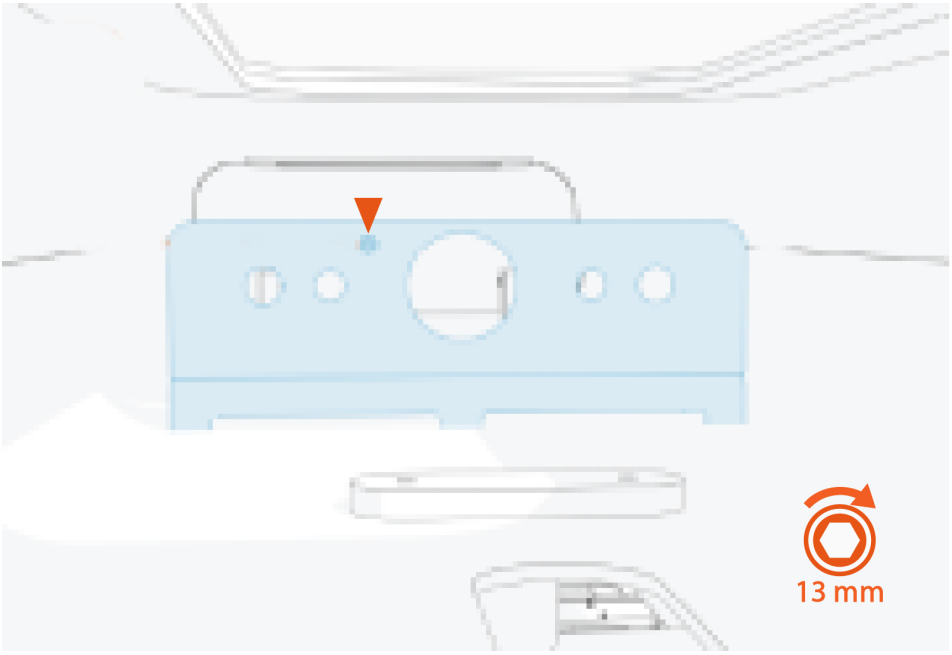

Complete the Install 13

IMPORTANT: Do not reconnect the power after completing the installation (after installing the covers). An Authorized Commissioning Partner will commission, power on, pinpoint, and configure Pantograph Down 2000 after installation.

Complete Schunk SLS 201.102 Auxiliary Components Frame

Parts Needed

The following parts are needed from auxiliary components mounting frame install:

- Rear cover
- Side covers

Install Rear Cover

1. Loosen (do not remove) M6 nuts (x6) on the rear cover.

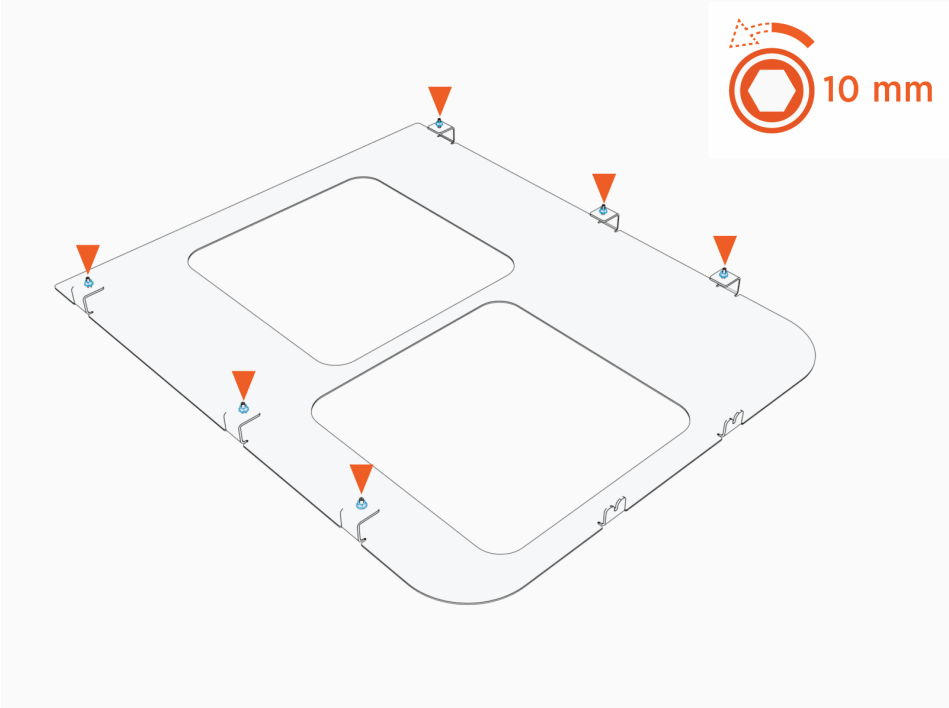

2. Install the rear cover onto the left and right rails. Slide the cover until it locks into the keyholes.

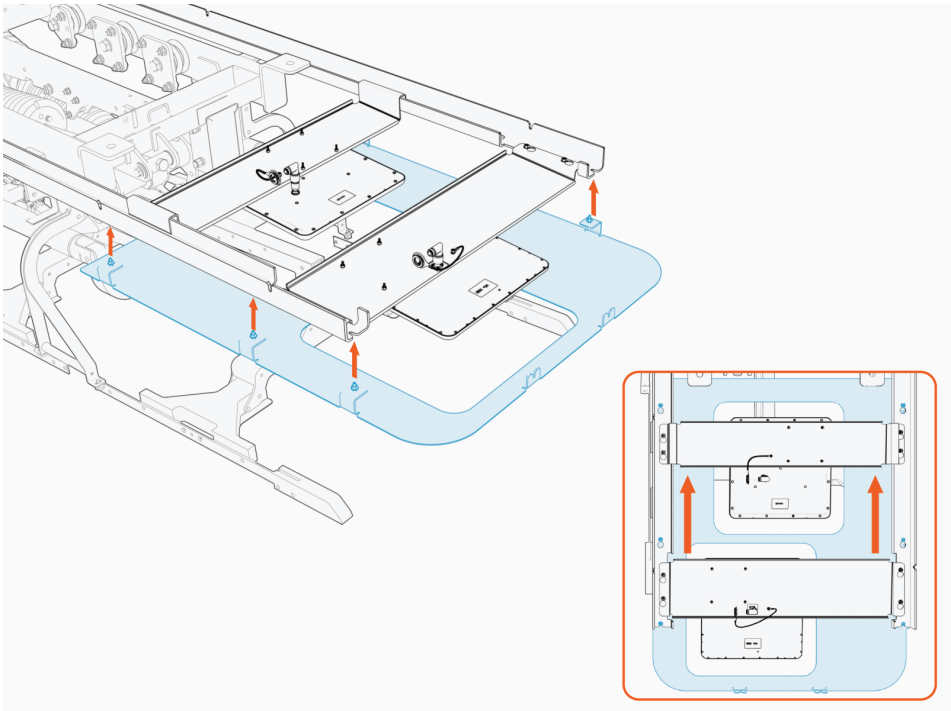

3. Tighten the M6 nuts (x6). Torque to **5.6 Nm (50 in-lb)**.

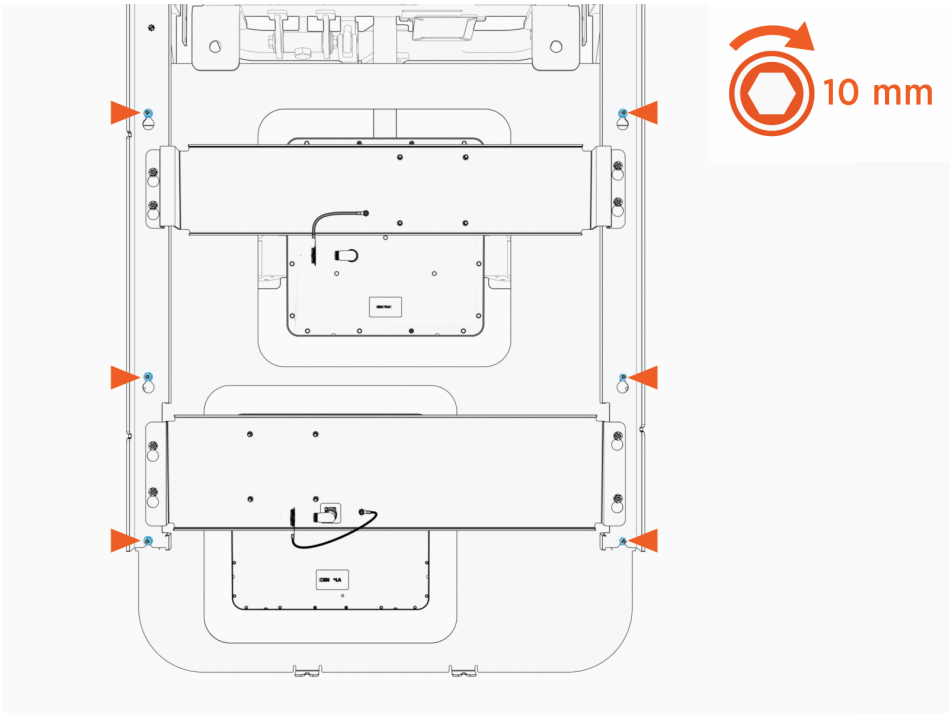

Install Side Covers

1. Loosen (do not remove) the M6 nuts (x4) on the length of the left side cover.

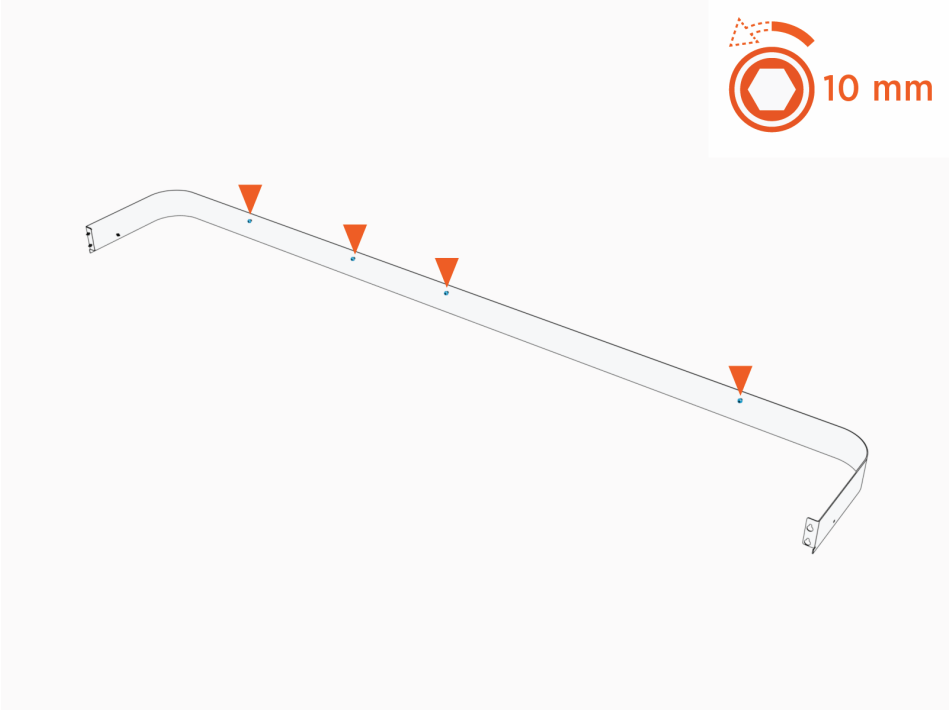

2. Loosen (do not remove) M5 nuts (x4) on the side cover.

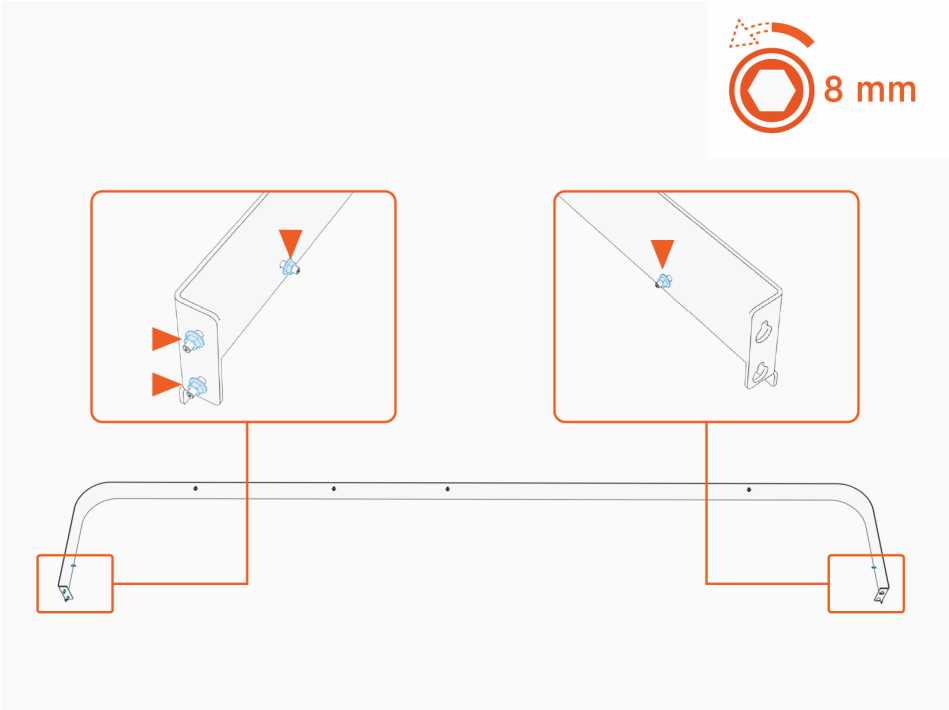

3. Install the left side cover. Make sure the cover seats into slots (x6).

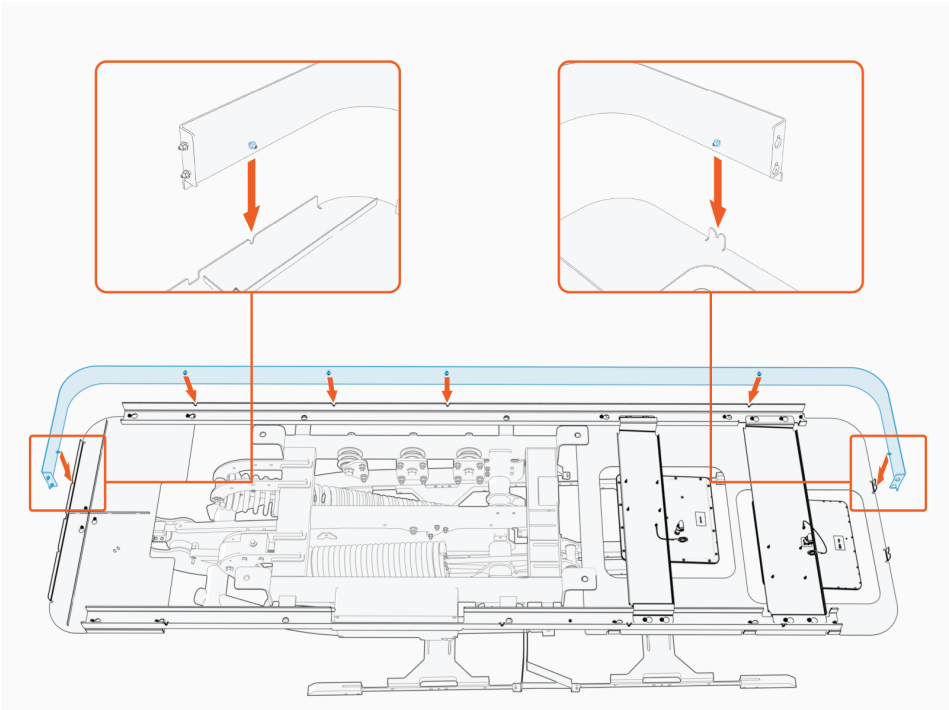

4. Tighten M6 nuts (x4) to fasten the side cover. Torque to **5.6 Nm (50 in-lb)**.

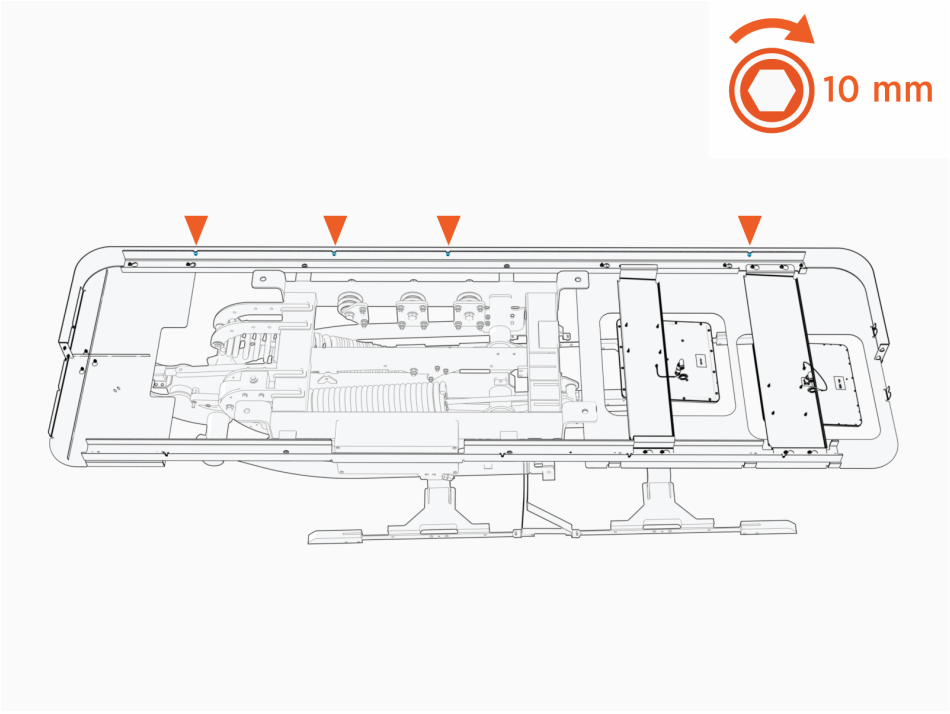

5. Tighten M5 nuts at each end of the side cover (x1 nut per end). Torque to **4.5 Nm (40 in-lb)**.

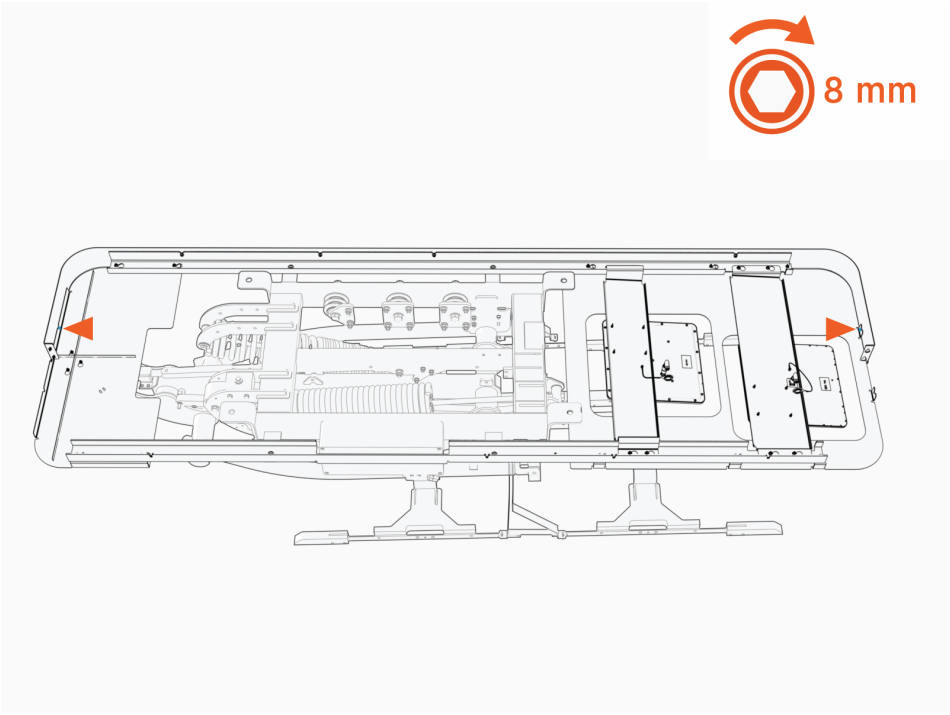

6. Repeat above steps to install the right side cover. At the front and rear ends of the frame, align and fasten the left and right side cover together with nuts (x2 each end).

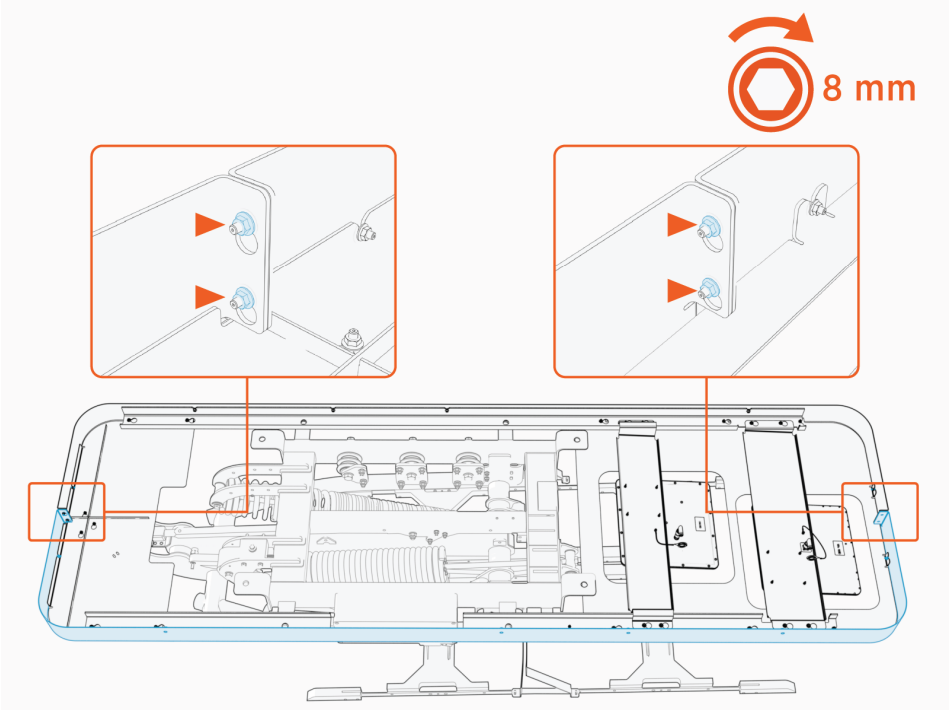

Close Power Link 2000

Parts Needed

The following part, saved from Power Link 2000 mount, is needed:

- HV DC bus bar safety cover

Reinstall Internal Bus Bar Safety Cover

1. Vacuum any residue from the bottom of the enclosure.
2. Install internal bus bar safety cover onto the hooks (x2) and latches (x2). Slide the cover down to engage the latch.

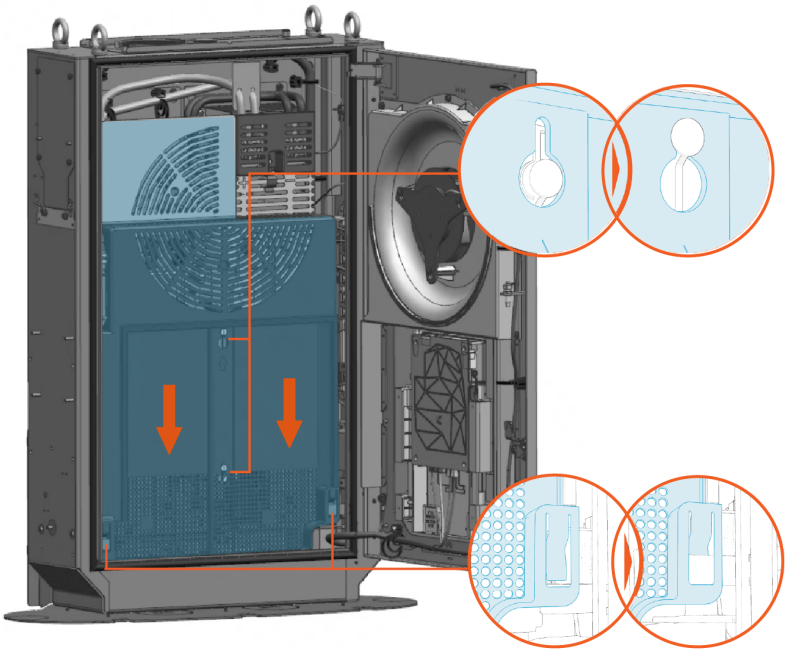

Record MAC Address

Take a photograph of the Power Link 2000 activation QR code and MAC address, which can be found on the label affixed to the top of the Control and Communications Module (CCOM). This information is used at Power Link 2000 setup.

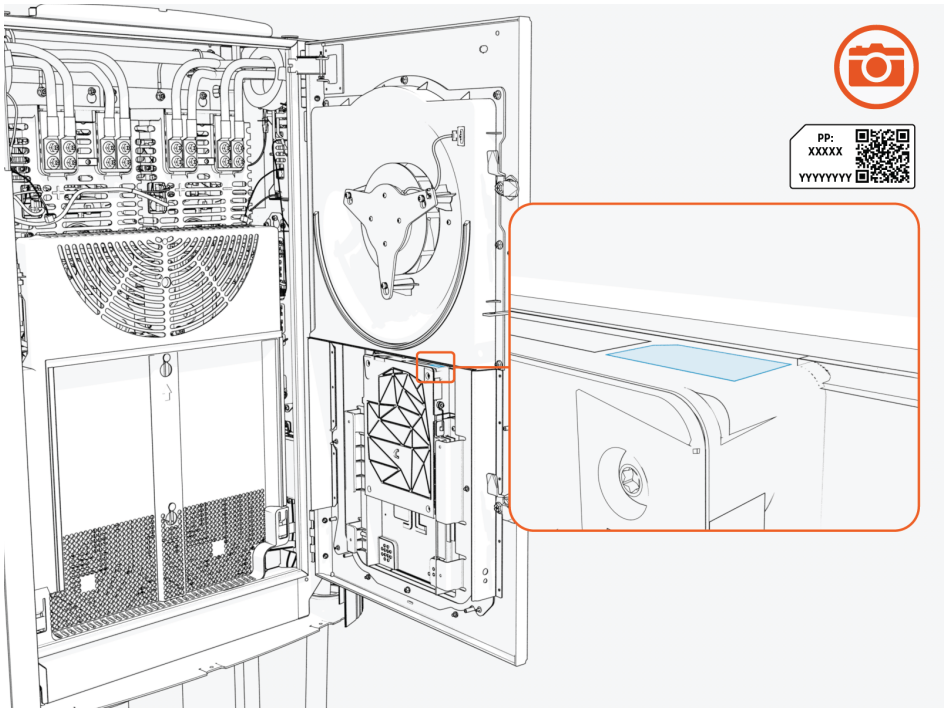

Close and Lock Door

1. Disengage the windstop and close the door.

2. Quarter turn the door latches (x2).

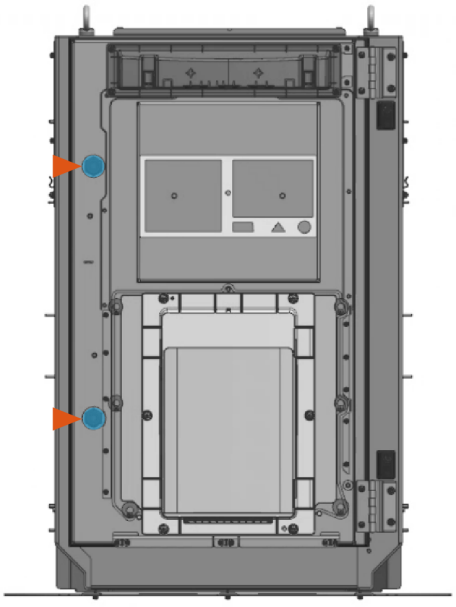

Close and Lock PD Controller

1. Vacuum any residue from the bottom of the enclosure.
2. Close the door.

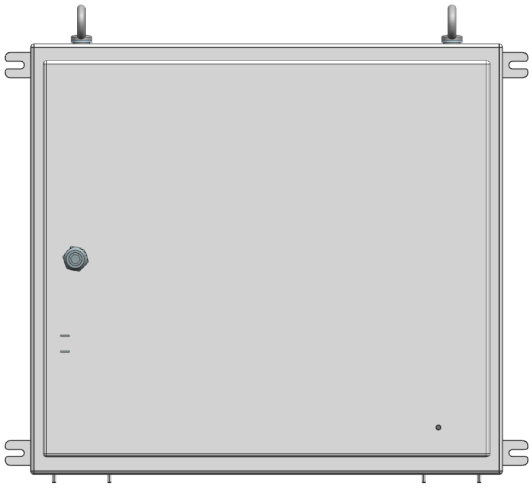

3. Quarter turn to lock the door.

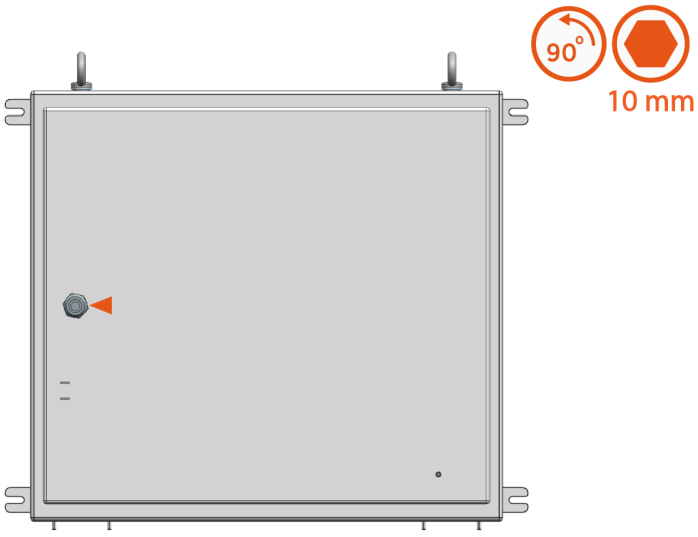

Install Mast Panels and Covers

Parts Needed

The following parts are needed:

- All parts from Mast Panels and Covers Crate
- Parts from the Mast Installation Parts Crate:
    - Pivot hinge plugs (x2)
    - 3/8 in button-head screws (x16)
    - Lanyards with caribiner clips (x3)
- Parts from the Mast Components Kit:
    - Door window cover
    - Mesh screens, small (x2)
    - Mesh screen, large
    - M4 screws and M4 oversized washers (x10 each)
    - M6 screws and M6 nuts (x18 each)
- Saved mast part:
    - Pins (x2) (originally used to secure pivot yokes)

Install Covers and Panels

1. Install the pantograph access cover. Secure with 3/8 in button-head screws (x2). Torque to **5.6 Nm (50 in-lb)**.

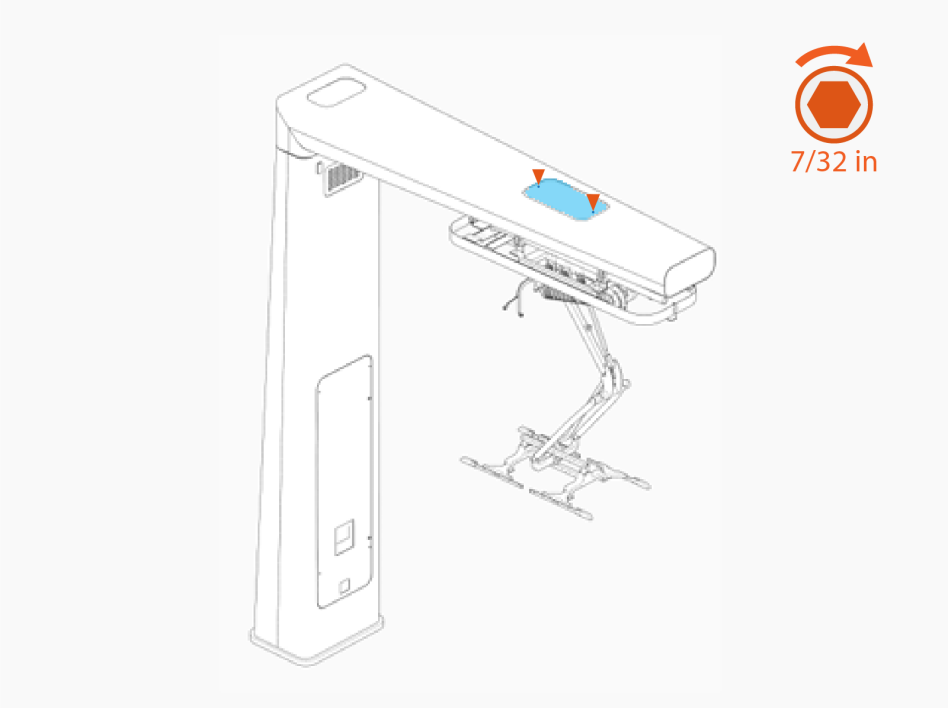

2. Install the hinge access cover. Secure with 3/8 in button-head screws (x2). Torque to **5.6 Nm (50 in-lb)**.

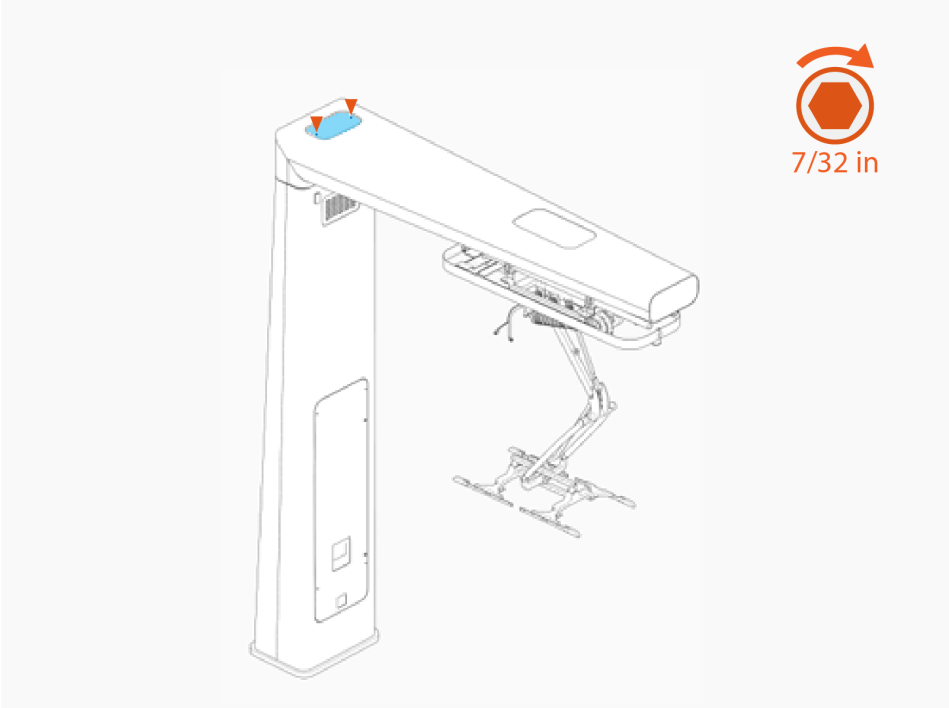

3. Position the mast endcap close to the mast arm. Clip one end of a lanyard to the endcap bracket. Clip the other end of the lanyard just inside the mast arm.

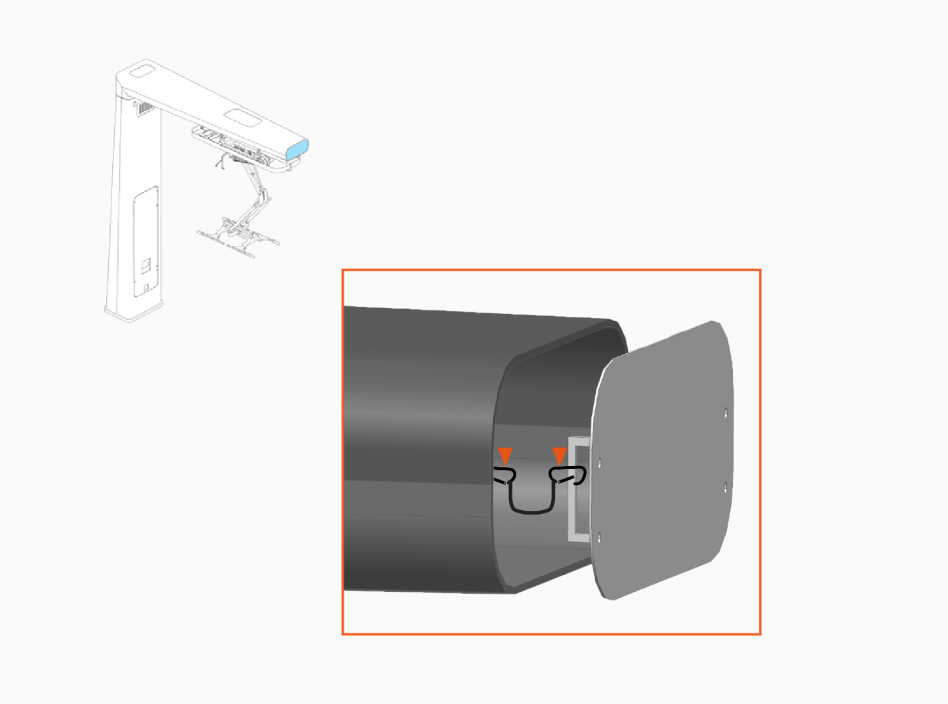

4. Install the endcap. Secure with 3/8 in button-head screws (x4). Torque to **5.6 Nm (50 in-lb)**.

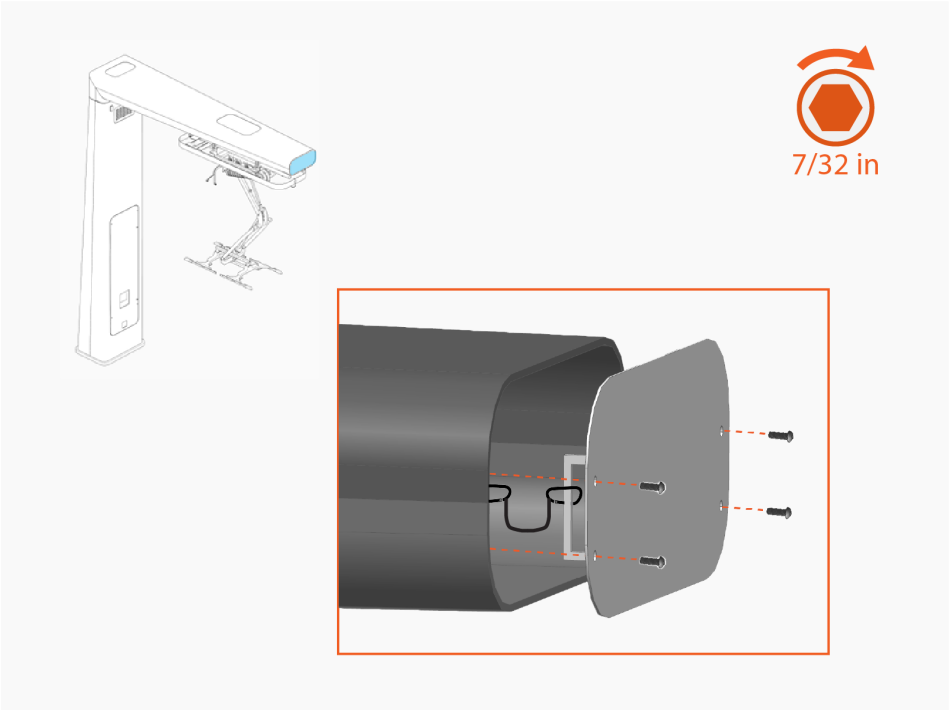

5. Install pivot hinge plugs (x2). Inside the mast column, secure each plug with a pin.

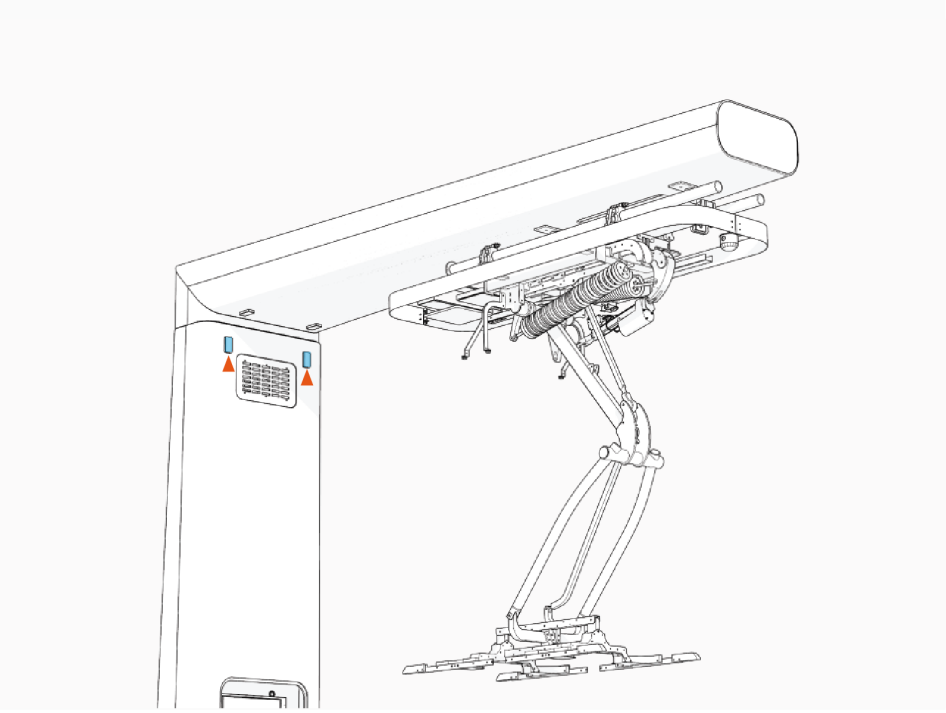

6. Find the upper vent panels. Identify the side of the panel with a bracket **(a)**. This is the rear side of the panel (the panel side that installs facing inside the mast).

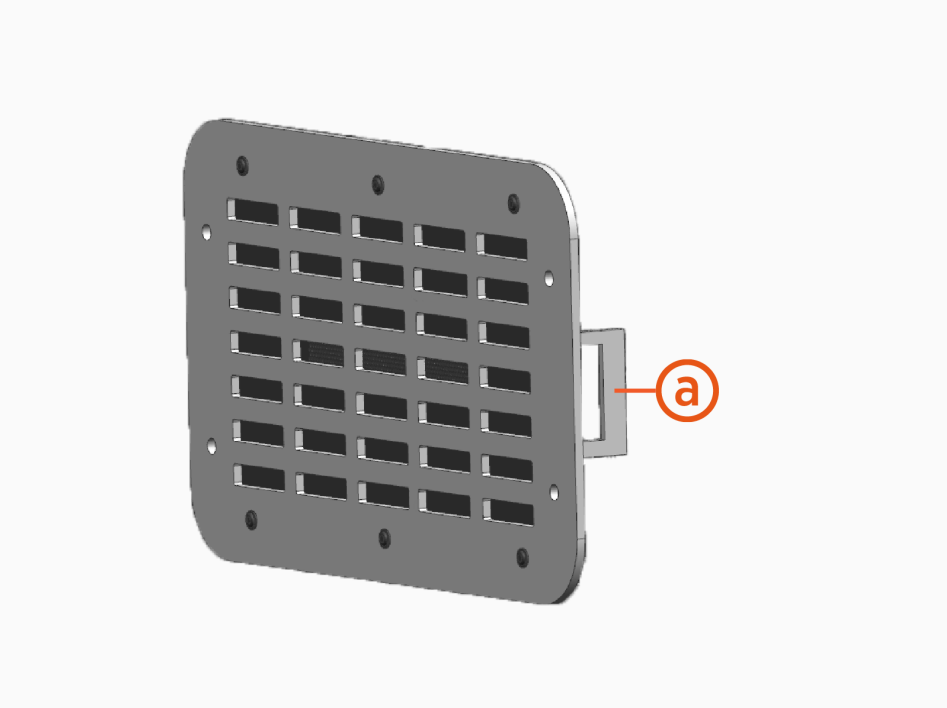

7. Fasten small mesh screens to the rear side of the upper vent panels (x2). Use M6 screws and flange nuts (x6 each screen). Torque to **5.6 Nm (50 in-lb)**.

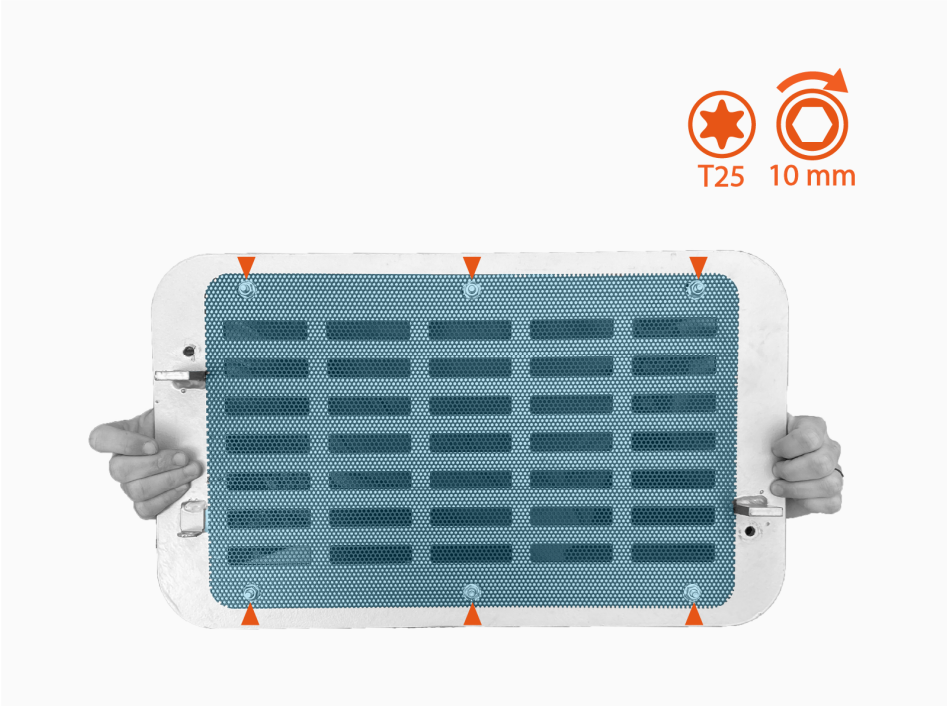

8. Position an upper vent panel at the front vent opening. Clip one end of a lanyard to the vent panel bracket. Clip the other end of the lanyard just inside the vent opening.

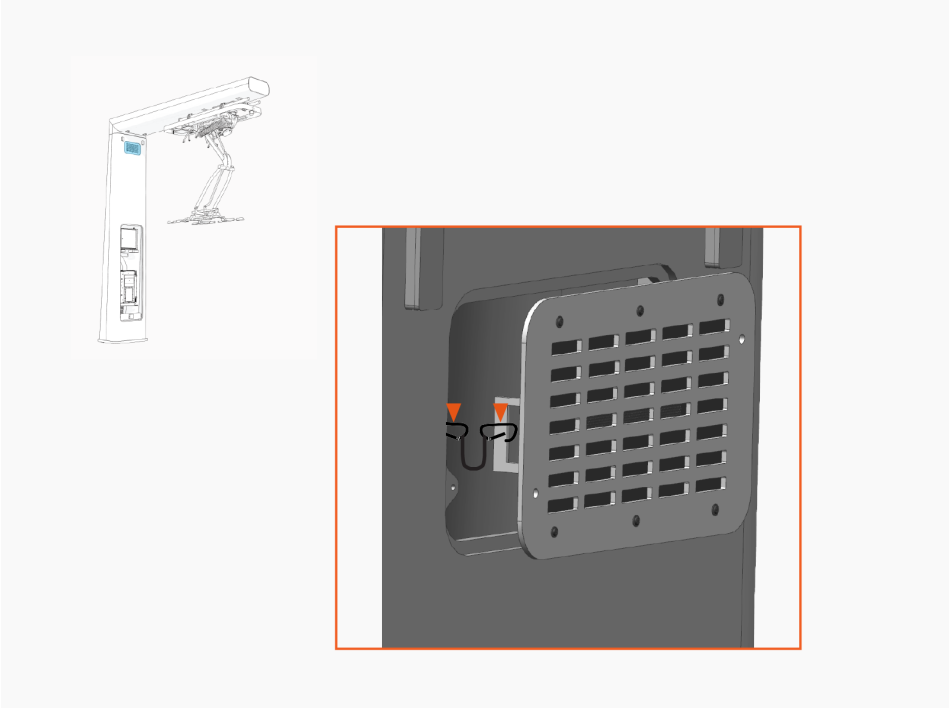

9. Install the vent panel. Secure with 3/8 in button-head screws (x2). Torque to **5.6 Nm (50 in-lb)**.

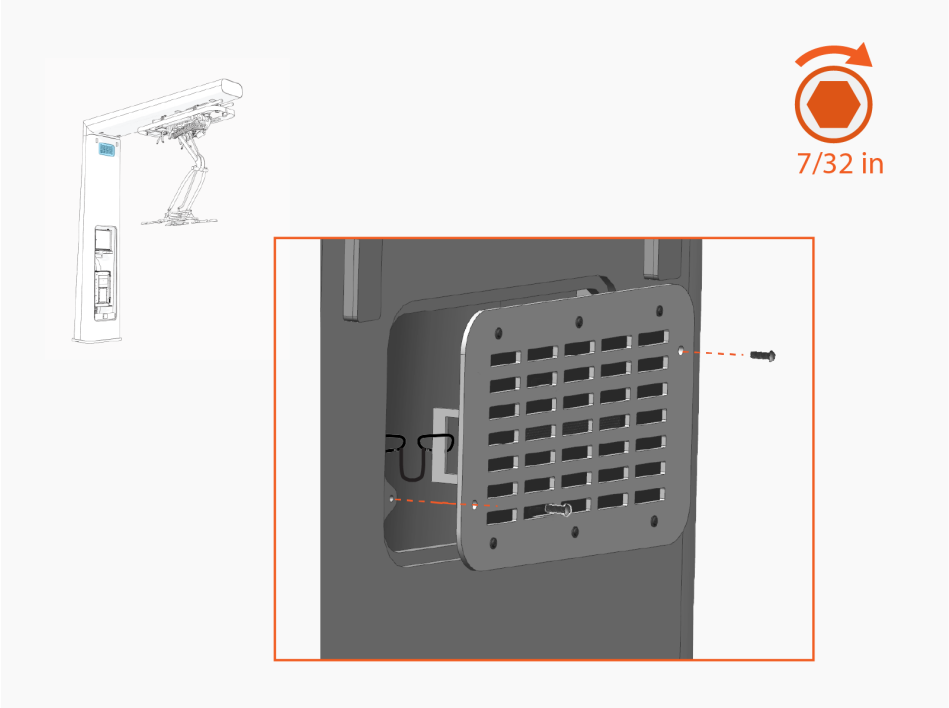

10. Repeat to install the remaining vent panel (with lanyard) at the upper rear vent opening. Torque fasteners (x2) to **5.6 Nm (50 in-lb)**.

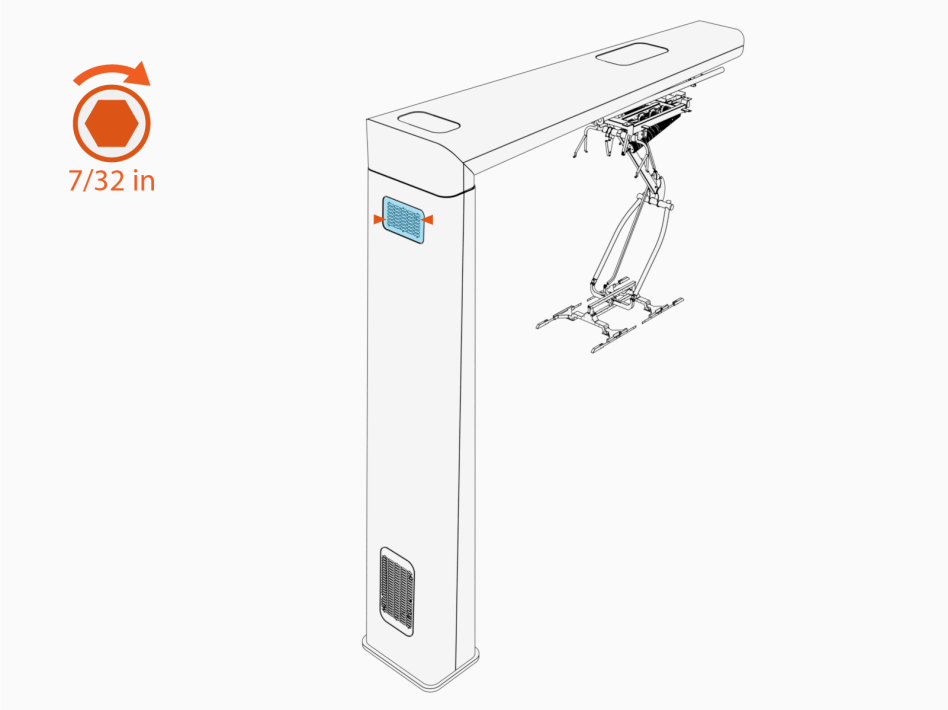

11. Find the lower rear vent panel. Identify the side of the panel with two brackets. This is the rear side of the panel (the panel side that installs facing inside the mast).

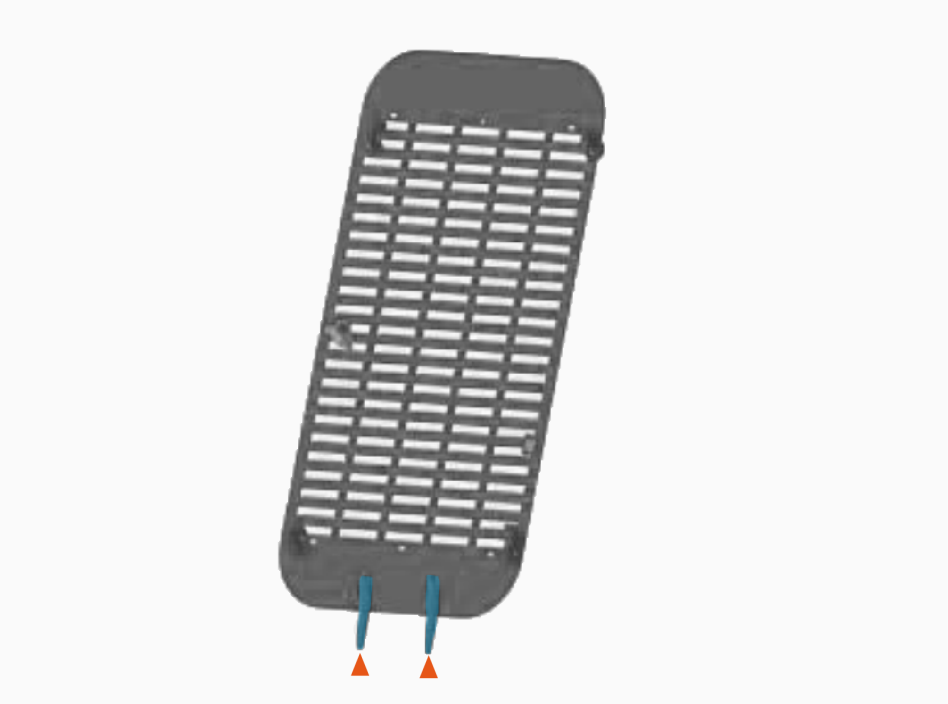

12. Fasten large mesh screen on the rear side of the lower rear vent panel. Use M6 screws and flange nuts (x6 each). Torque to **5.6 Nm (50 in-lb)**.

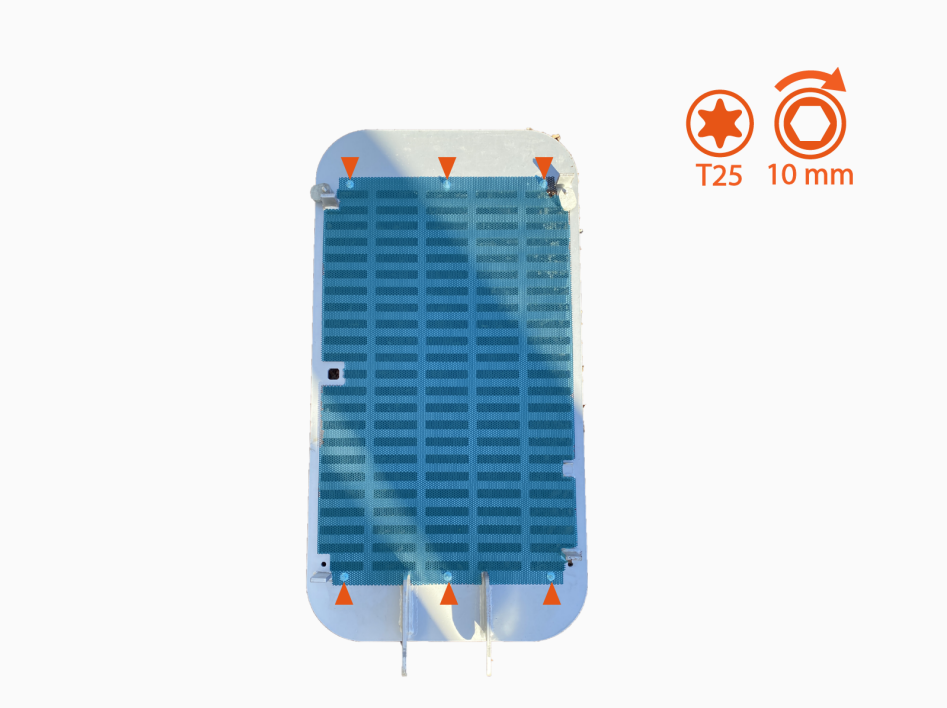

13. Install the lower rear vent panel. Secure with 3/8 in button-head screws (x4). Torque to **5.6 Nm (50 in-lb)**.

14. Install door window cover. Secure with M4 screw and M4 oversized washer (x10 each). Torque to **1.1 Nm (10 in-lb)**.

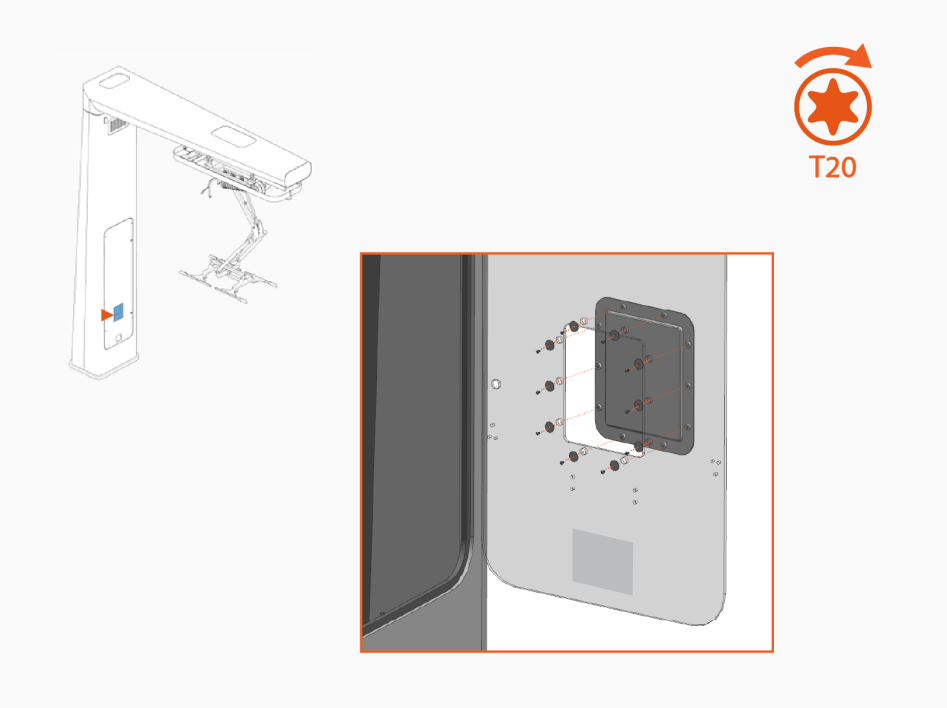

Seal Conduits

1. Vacuum any residue from inside the base of the mast.
2. Apply duct seal compound in conduit openings.

Close Door

1. Close the mast door.
2. Hand tighten screws (x4) until latches lock onto the mast. Test door to ensure latches are secure.

3. Quarter turn to engage door cam locks (x2).

Recommended Checklist 14

To adhere to ChargePoint best practices, complete this checklist before you leave the site.

Express Plus Pantograph Down 2000 Post-Installation Checklist		
1.	Verify the site is energized by utility.	☐
2.	Ensure site AC voltage measurements are within acceptable range (480 V AC +/- 10% (Phase-Phase).	☐
3.	Ensure all ground and earth connections are made, including those to ground lugs. See Connect Power Link 2000 Wires , Connect PD Controller Wires, and Connect Pantograph Down Mast Wires.	☐
4.	Ensure all Power Link 2000 wire connections have correct polarity and are installed on the correct bus. See Connect Power Link 2000 Wires.	☐
5.	Ensure all Schunk SLS 201.102 wire connections have correct polarity and are installed on the correct bus. See Connect Pantograph Wires.	☐
6.	Within the Power Link 2000, ensure all service wires are inserted into their designated terminal blocks, and ensure all electrical connections are clean and snug (not pinched or trapped). See Connect Power Link 2000 Wires.	☐
7.	Within the PD Controller, ensure all service and system wires are inserted into their designated terminal blocks, and ensure all electrical connections are clean and snug (not pinched or trapped). Perform a visual inspection on all controller interface cable wires at their landing terminals to ensure field-installed wires mirror factory-installed wires in terms of terminal port position and wire color. See Connect PD Controller Wires.	☐
8.	At the Schunk SLS 201.102 pantograph, ensure all system cables are installed and secure. At the pantograph control box, verify all wires are inserted into their designated terminals and all electrical connections are clean and snug (not pinched or trapped). See Connect Schunk SLS 201.102 Pantograph Wires.	☐
9.	Ensure all electrical enclosures are cleaned and vacuumed and are free of wire strands, metal shavings, debris, packaging material, or all other foreign objects.	☐
10.	Ensure all clearance requirements for service and ventilation of the Pantograph Down Mast and pantograph are met. Refer to the Clearances and Ventilation sections of the *Express PlusPantograph Down 2000 Site Design Guide*.	☐
11.	Ensure the Pantograph Down Mast, Power Link 2000, PD Controller, and pantograph are fully secured and do not rock or move at their mounting points.	☐

Express Plus Pantograph Down 2000 Post-Installation Checklist		
12.	Ensure the Pantograph Down Mast mounting nuts are torqued per the Turn of Nut Technique by verifying the angle between the anchor bolt and anchor nut torque marks. See Mount Pantograph Down Mast.	☐
13.	Ensure the fasteners connecting the mast arm to the mast pole are torqued per the Turn of Nut Technique by verifying the angle between the anchor bolt and anchor nut torque marks. See Mount Pantograph Down Mast.	☐
14.	Ensure the Power Link 2000 mounting base fasteners are torqued to **50 Nm (37 ft-lb)** and the enclosure mounting screws are torqued to **5.6 Nm (50 in-lb)**. See Mount Power Link 2000.	☐
15.	Ensure the PD Controller mounting strut fasteners are torqued to **50 Nm (37 ft-lb)** and the enclosure mounting bolts are torqued to **10 Nm (90 in-lb)**. See Mount PD Controller.	☐
16.	Ensure the Schunk SLS 201.102 mounting fasteners are torqued to **99 Nm (73 ft-lb)** and the rail clamp fasteners are torqued to **4.7 Nm (42 in-lb)**. See Mount Schunk SLS 201.102 Pantograph.	☐
17.	Ensure the conductors, cables, and lugs meet the specifications listed in Wires and Terminations Required for Site.	☐
18.	All Power Link 2000 cables (HVDC, LVDC) are labeled correctly and clearly identified. See Connect Power Link 2000 Wires.	☐
19.	Ensure that all fasteners on the field-installed components are properly torqued. See Tightening Torques.	☐
20.	Ensure Power Link 2000 input and output HV DC wires have undergone wire insulation resistance test and have test results ready to present at system commissioning See Pull, Cut, and Connect Power Link 2000 Wires.	☐
21.	Ensure an electrical installer will be on site during commissioning.	☐
22.	Verify all site construction work is complete.	☐
23.	Ensure the site is inspected by authority having jurisdiction (AHJ).	☐
24.	Ensure all enclosure doors are closed, and all covers and panels are installed. See Complete the Install.	☐
25.	Ensure that any twists in charging cables are removed and straightened.	☐
26.	Ensure the parking area is clean and free of all packaging, debris, and anything that could damage vehicle tires.	☐
27.	Ensure all local required forms are prepared.	☐

Third-Party Service Providers

Services Performed

Details	Complete the following:
Description of Service Provided	
Location	
Unit	
Panel ID	
Breaker	

Contact Information

Service Provider	Complete the following:
Technician Name	
Email	
Service Company Name	
Address	
Contact Person	
Phone	

Site Owner/Customer	Complete the following:
Contact Person	
Email	
Business Name	
Site Address	
Phone	

Questions

For assistance, navigate to *chargepoint.com/support* and contact technical support using the appropriate region-specific number.

Appendix: Low Voltage Wire Reference A

RFID and Wi-Fi Antenna Cable

Pantograph Down 2000 ships with RF coaxial cables for connecting the Wi-Fi and RFID antennas to the PD Controller.

Cable	Max. Length	Cable Type	Termination A*	Termination B*
Wi-Fi antenna	10 m (32.8 ft)	LMR-240 or equivalent, 6.1 mm (0.24 in) outer diameter, and low loss operating up to 5.8 GHz or higher.	RP-SMA male	N-type male
RFID antenna	10 m (32.8 ft)	LMR-240 or equivalent, 6.1 mm (0.24 in) outer diameter, and low loss operating up to 1 GHz or higher.	RP-SMA male	N-type male
*Termination A lands at the PD Controller. Termination B lands at the antenna.				

IMPORTANT:

- The LMR-240 cable has a one-time bend radius of 19 mm (0.75 in) and repeated bend radius of 63 mm (2.5 in). If these are exceeded, the cable may be damaged and the system may not operate. If using an LMR-240 equivalent, do not violate the bend radius of that cable type.
- The RF coaxial cables may not be coiled within the PD Controller.

IMPORTANT: Pantograph Down 2000 may ship with multiple sets of RF coaxial cables of different lengths. For installation of Pantograph Down 2000 with the Pantograph Down Mast, use the 13 m (42.7 ft) RF coaxial cables shipped in the Mast Components Kit. Do not use provided RF coaxial cables of any other length.

The PD Controller ships with a pre-installed 3/4 in NPT multi-hole cable gland for the secure entry of the antenna cables at the enclosure. The antenna cables can be fed through the gland in only one direction, from the antennas towards the PD Controller. Feeding the RP-SMA connectors through the gland may be snug and should be done using the following steps:

1. Remove the gland insert from the gland housing.
2. Slide gland cap over both cables.
3. Insert the cables through the gland insert.

CAUTION: Push the RP-SMA connector head through the gland insert by holding the connector itself to avoid the risk of kinking the cable.

4. Reinstall the gland insert fully into the gland body.

When routing the antenna cables between the PD Controller and the antennas, keep in mind the following three factors:

1. The RF coaxial cables may not be coiled within the PD Controller.
2. The RF coaxial cables may not be cut. (They may be ordered to custom length.)
3. The RF coaxial cables may not be bent beyond the bend radius limits discussed above.

Controller Interface Cable Schunk SLS 201.102

The controller interface cable is a single cable that bundles four system cables.

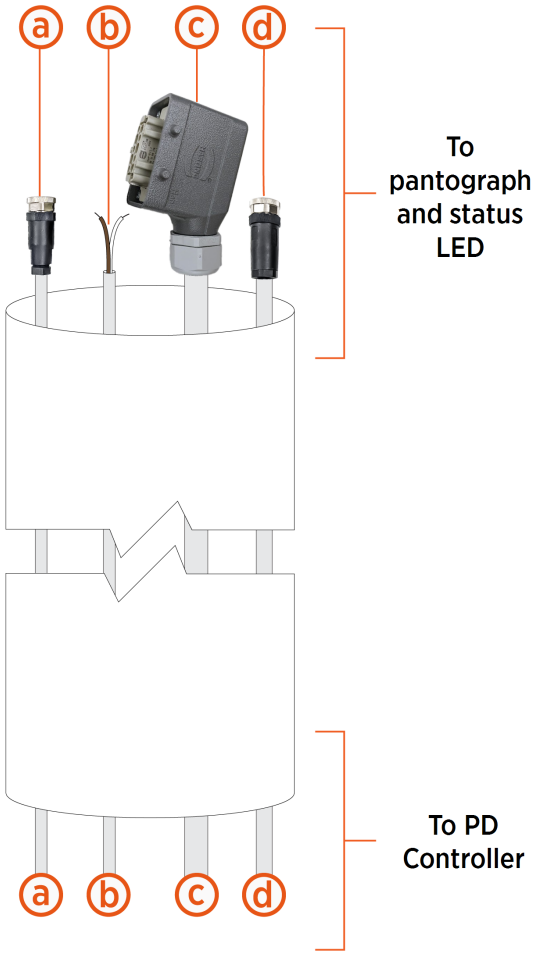

- **(a)** Pantograph rest sensor cable (4-pin connector)
- **(b)** Pantograph control pilot cable
- **(c)** Pantograph control cable
- **(d)** Status LED cable (8-pin connector)

Cable cross-section:

IMPORTANT: Pantograph Down 2000 may ship with multiple controller interface cables of different lengths. For installation of Pantograph Down 2000 with the Pantograph Down Mast, use the 13 m (42.7 ft) cable shipped in the Mast Components Kit. Do not use provided cable of any other length.

Cable Terminations at PD Controller

One end of the controller interface cable terminates at the PD Controller. The system cables at this end are unterminated. The wires at this end of the cable are landed within the PD Controller by wire color. For locations of the landing terminals within the PD Controller, see Connect Controller Interface Cable Wires.

Pantograph Control Cable

Wire	Wire Color	Wire Gauge	Terminal Block ID	Port Number	Wire Strip Length
Pantograph low current 24 V	Red/white	20 AWG (0.5 mm^2)	TB9	4	13 mm (0.5 in)
Pantograph motor GND	Black	14 AWG (2.5 mm^2)	TB8	6	12 mm (0.5 in)
Pantograph high current GND	Black	16 AWG (1.5 mm^2)	TB8	5	12 mm (0.5 in)
Pantograph low current GND	Black	20 AWG (0.5 mm^2)	TB8	4	12 mm (0.5 in)
Pantograph high current 24 V	Red	14 AWG (2.5 mm^2)	TB10	4	13 mm (0.5 in)
Raised	Blue	20 AWG (0.5 mm^2)	TB11	4B	10 mm (0.4 in)
Lowered	Yellow	20 AWG (0.5 mm^2)	TB11	3B	10 mm (0.4 in)
Request raise	Blue/white	20 AWG (0.5 mm^2)	TB13	4B	10 mm (0.4 in)
Request lower	Yellow/white	20 AWG (0.5 mm^2)	TB13	3B	10 mm (0.4 in)

Pantograph Rest Sensor Cable

Wire	Wire Color	Wire Gauge	Terminal Block ID	Port Number	Wire Strip Length
Rest signal	Green/blue	20 AWG (0.5 mm^2)	TB11	1B	10 mm (0.4 in)
Rest 24 V	Red/white	20 AWG (0.5 mm^2)	TB9	3	13 mm (0.5 in)
Rest GND	Black	20 AWG (0.5 mm^2)	TB8	3	12 mm (0.5 in)

Pantograph Control Pilot Cable

Wire	Wire Color	Wire Gauge	Terminal Block ID	Port Number	Wire Strip Length
Control pilot	White/brown	20 AWG (0.5 mm^2)	TB5	1B	12 mm (0.5 in)
Control pilot shield	Brown/black	20 AWG (0.5 mm^2)	TB5	2B	12 mm (0.5 in)

Status LED Cable

Wire Color	Wire Gauge	Terminal Block ID	Port Number	Wire Strip Length
Orange	24 AWG (0.2 mm^2)	TB6	1B	10 mm (0.4 in)
White/orange	24 AWG (0.2 mm^2)	TB6	2B	10 mm (0.4 in)
Brown	24 AWG (0.2 mm^2)	TB6	3B	10 mm (0.4 in)
White/brown	24 AWG (0.2 mm^2)	TB6	4B	10 mm (0.4 in)
Blue	24 AWG (0.2 mm^2)	TB7	1B	10 mm (0.4 in)
White/blue	24 AWG (0.2 mm^2)	TB7	2B	10 mm (0.4 in)
Green	24 AWG (0.2 mm^2)	TB7	3B	10 mm (0.4 in)
White/green	24 AWG (0.2 mm^2)	TB7	4B	10 mm (0.4 in)

Cable Terminations at Pantograph and Status LED

One end of the controller interface cable terminates at the pantograph and status LED. The pantograph rest sensor cable, pantograph control cable, and status LED cables at this end are terminated with connectors. The control pilot cable is unterminated.

System Cable	Connector Type	Reference Image
Pantograph rest sensor	M12, A-code, 4-pin, female	
Pantograph control	Harting, female	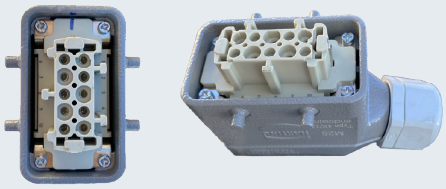
Status LED	M12, A-code, 8-pin, female	

Routing Through Conduit and Cable Gland

The PD Controller ships with a pre-installed 1-1/4 in NPT cable gland for the secure entry of the controller interface cable at the enclosure. Due to the size of the terminating connectors on one end of the cable, the controller interface cable can be fed through the cable gland and through the conduit in only one direction, from the pantograph towards the PD Controller.

Pantograph Frame to Auxiliary Frame Ground Wire

Pantograph Down 2000 ships with a 0.5 m (1.6 ft) x 16 mm^2 (6 AWG) ground wire for connection between the pantograph frame and the auxiliary component mounting frame. The wire is pre-terminated at one end with a ring terminal sized for an M8 bolt. This end of the wire lands at the pantograph frame. The other end of the wire is pre-terminated with a ring terminal sized for an M6 bolt. This end of the wire lands at the auxiliary mount frame.

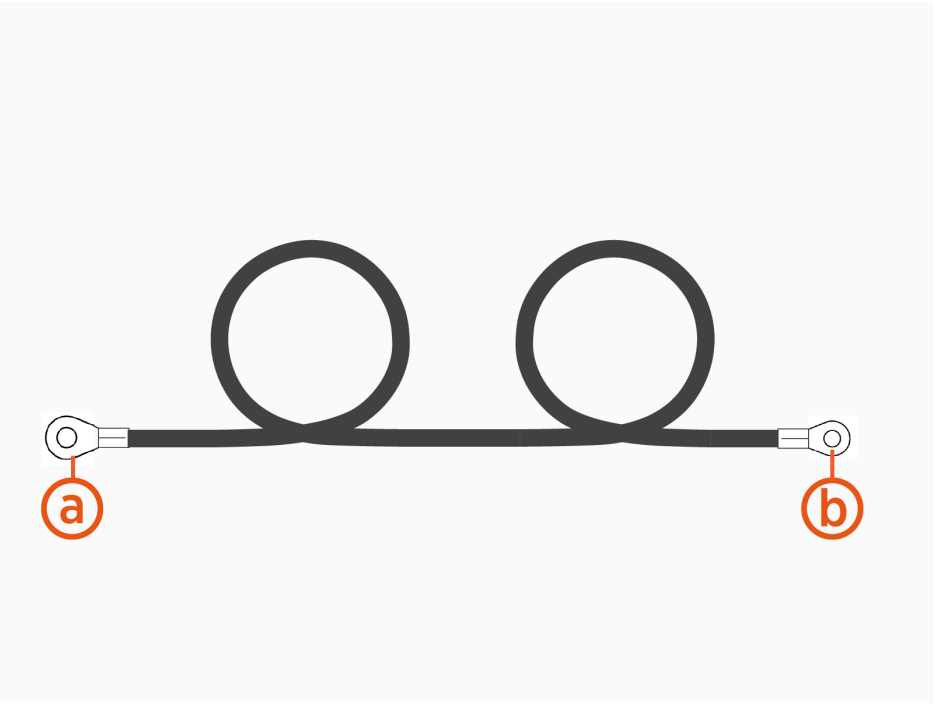

(a) M8 ring terminal (lands at pantograph)

(b) M6 ring terminal (lands at auxiliary mounting frame)

Power Link 2000 to PD Controller LV DC Wire Assembly

Pantograph Down 2000 ships with a 2 m (6.6 ft) wire assembly for LV DC connection from Power Link 2000 to the PD Controller. The assembly consists of two 20 AWG wires (+48 V/red and 48 V RTN/black) fitted at one end with a 4-pin female microfit connector. This end lands in the Power Link 2000. The unterminated wire ends land in the PD Controller.

(a) 4-pin female microfit connector (lands in Power Link 2000)

(b) Unterminated wires (land in PD Controler)

Appendix: Set Up Power Link 2000 B

IMPORTANT: Do not power on Pantograph Down 2000 after completing the installation. An Authorized Commissioning Partner will commission, power on, pinpoint, and configure Pantograph Down 2000 after installation. If you are authorized to do so, complete the following procedures:

Power On

Note: Pantograph Down 2000 must pass commissioning before power on, or warranty limitations apply.

1. Ensure all doors and panels, covers, vinyl signs, and all other parts have been correctly installed and the work is complete.
2. Turn on power at the same points that you turned it off.

   Note: If the site has a remote shunt trip switch, ensure that the switch is in the operating position.
3. Wait for self-diagnostics to run. The system may take several minutes to initiate. You may see messages intermittently until the system fully boots up.

Self-Diagnostic	After Installation	After Service or Power Outage
Electrical safety checks	✓	✓
Lighting checks	✓	✓
Display panel checks	✓	✓
Component operation checks	✓	✓
Network connectivity checks	✓	✓

Set Up Power Link 2000

After you power on the Pantograph Down 2000 system at the breaker panel, you must set up and activate the Power Link 2000. To do so, you need:

- ChargePoint installer login credentials.
- Activation label (QR code label including the MAC address and activation password).
- The exact location (to the parking space) where the Pantograph Down 2000 is installed.
- A smartphone with ChargePoint Installer app, Internet connectivity, and QR code scanner (usually built into the camera app).

  Scan the QR code to download the Installer app, and sign up if necessary.

Follow the steps below to set up Power Link 2000:

1. Open the ChargePoint Installer app and log in.
2. Follow the onscreen prompts.

   Note: To connect to Power Link 2000 and complete setup, you need to scan the QR code or manually enter the MAC address and password of Power Link 2000. You can find them on the activation label affixed on top of the display or non-display unit.

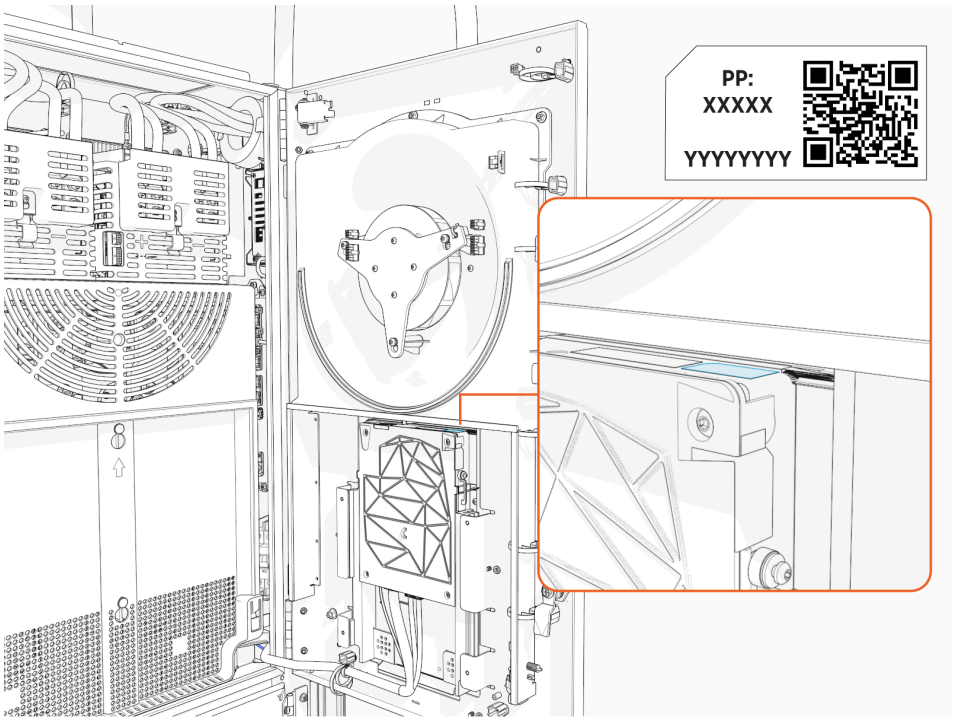

Limited Warranty Information and Disclaimer

The Limited Warranty you received with your charging station is subject to certain exceptions and exclusions. For example, your use of, installation of, or modification to, the ChargePoint® charging station in a manner in which the ChargePoint® charging station is not intended to be used or modified will void the limited warranty. You should review your limited warranty and become familiar with the terms thereof. Other than any such limited warranty, the ChargePoint products are provided "AS IS," and ChargePoint, Inc. and its distributors expressly disclaim all implied warranties, including any warranty of design, merchantability, fitness for a particular purposes and non-infringement, to the maximum extent permitted by law.

Limitation of Liability

CHARGEPOINT IS NOT LIABLE FOR ANY DIRECT, INDIRECT, INCIDENTAL, SPECIAL, PUNITIVE OR CONSEQUENTIAL DAMAGES, INCLUDING WITHOUT LIMITATION LOST PROFITS, LOST BUSINESS, LOST DATA, LOSS OF USE, OR COST OF COVER INCURRED BY YOU ARISING OUT OF OR RELATED TO YOUR PURCHASE OR USE OF, OR INABILITY TO USE, THE CHARGING STATION, UNDER ANY THEORY OF LIABILITY, WHETHER IN AN ACTION IN CONTRACT, STRICT LIABILITY, TORT (INCLUDING NEGLIGENCE) OR OTHER LEGAL OR EQUITABLE THEORY, EVEN IF CHARGEPOINT KNEW OR SHOULD HAVE KNOWN OF THE POSSIBILITY OF SUCH DAMAGES. IN ANY EVENT, THE CUMULATIVE LIABILITY OF CHARGEPOINT FOR ALL CLAIMS WHATSOEVER RELATED TO THE CHARGING STATION WILL NOT EXCEED THE PRICE YOU PAID FOR THE CHARGING STATION. THE LIMITATIONS SET FORTH HEREIN ARE INTENDED TO LIMIT THE LIABILITY OF CHARGEPOINT AND SHALL APPLY NOTWITHSTANDING ANY FAILURE OF ESSENTIAL PURPOSE OF ANY LIMITED REMEDY.

FCC Compliance Statement

This equipment has been tested and found to comply with the limits for a Class B digital device, pursuant to part 15 of the FCC Rules. These limits are designed to provide reasonable protection against harmful interference when the equipment is operated in a residential installation. This equipment generates, uses, and can radiate radio frequency energy and, if not installed and used in accordance with the instruction manual, may cause harmful interference to radio communications.

Important: Changes or modifications to this product not authorized by ChargePoint, inc., could affect the EMC compliance and revoke your authority to operate this product.

Exposure to Radio Frequency Energy: The radiated power output of the 802.11 b/g/n radio and cellular modem (optional) in this device is below the FCC radio frequency exposure limits for uncontrolled equipment. The antenna of this product, used under normal conditions, is at least 20 cm away from the body of the user. This device must not be co-located or operated with any other antenna or transmitter by the manufacturer, subject to the conditions of the FCC Grant.

ISED (formerly Industry Canada)

This device complies with the licence-exempt RSS standard(s) of Innovation, Science and Economic Development Canada (ISED). Operation is subject to the following two conditions: (1) this device may not cause interference, and (2) this device must accept any interference, including interference that may cause undesired operation of the device.

Cet appareil est conforme aux flux RSS exemptés de licence d'Innovation, Sciences et Développement économique Canada (ISDE). L'exploitation est autorisée aux deux conditions suivantes : (1) l'appareil ne doit pas produire de brouillage, et (2) l'utilisateur de l'appareil doit accepter.

Radiation Exposure Statement: This equipment complies with the IC RSS-102 radiation exposure limits set forth for an uncontrolled environment. This equipment should be installed and operated with a minimum distance of 20 cm between the radiator and your body.

Énoncé d'exposition aux rayonnements: Cet équipement est conforme aux limites d'exposition aux rayonnements ioniques RSS-102 Pour un environnement incontrôlé. Cet équipement doit être installé et utilisé avec un Distance minimale de 20 cm entre le radiateur et votre corps.

FCC/IC Compliance Labels

Visit chargepoint.com/labels.

chargepoint.com/support

75-001672-01 r2