ChargePoint CPF32 Level 2 Charging Stations

Specifications and Ordering Information

September 2019

Ordering Information

The order codes below represent specific product configurations. Other product options are available. Please contact ChargePoint Sales for information and order codes.

Hardware

Description		Order Code
Model	Single Wall Mount, Type 2 5,5 m Charging Cable	CPF32-T2-L5.5
	Single Pedestal Mount, Type 2 5,5 m Charging Cable	CPF32-T2-L5.5-PD
	Two Stations with Dual Pedestal Mount, Type 2 5,5 m Charging Cable	CPF32-T2-L5.5-PD-DUAL
	Single Wall Mount, Type 2 5,5 m Charging Cable and Cable Management Kit	CPF32-T2-L5.5-CMK6
	Single Pedestal Mount, Type 2 5,5 m Charging Cable and Cable Management Kit	CPF32-T2-L5.5-CMK-PD
	Two Stations with Dual Pedestal Mount, Type 2 5,5 m Charging Cable and Cable Management Kit	CPF32-T2-L5.5-CMK-PD-DUAL
Replacement Cable	Type 2 5,5 m, 32A Charging Cable	CPF32CORD-T2-L5.5
	Type 2 5,5 m, 32A Charging Cable with Clamp	CPF32CORD-T2-L5.5-CL

Required Companion Products

Description	Order Code
ChargePoint Gateway EU* (1 required for every 9 stations) CPGW-EU	CPGW-EU

* Provides cellular connectivity only to ChargePoint CPF32 stations. ChargePoint certified installers will do a site validation and order the ChargePoint Gateway as needed. As part of the make-ready, the site host needs to provide a location within 38 m line of sight of the ChargePoint stations with adequate cellular coverage. In addition, the site host is responsible for providing power to the gateway. The ChargePoint Gateway is owned and maintained by ChargePoint.

Architectural Drawings (Dimensions)

Single Wall Mount - CPF32-T2-L5.5

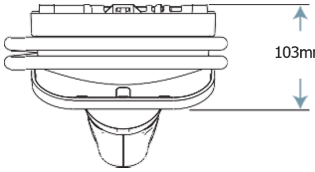

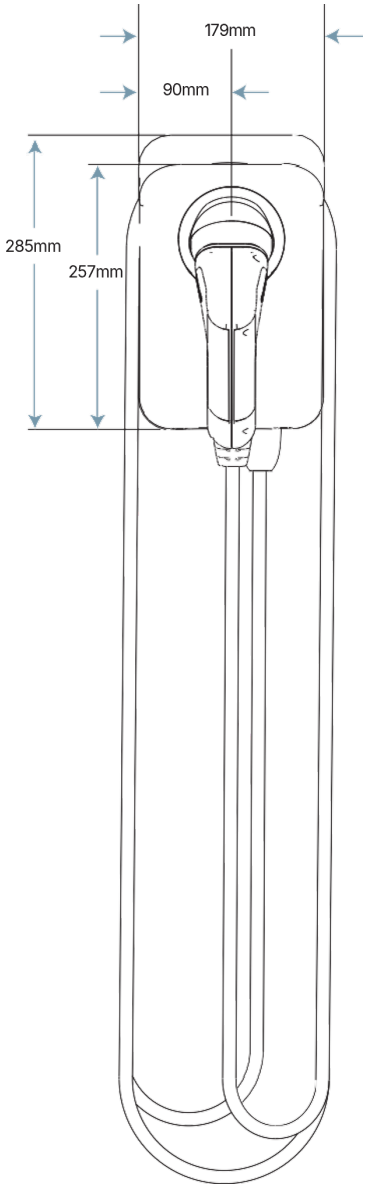

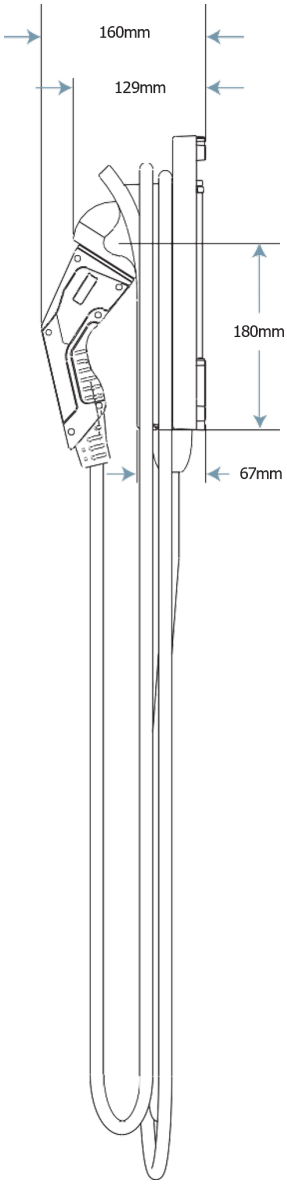

Single Wall Mount with Cable Management Kit - CPF32-T2-L5.5-CMK6

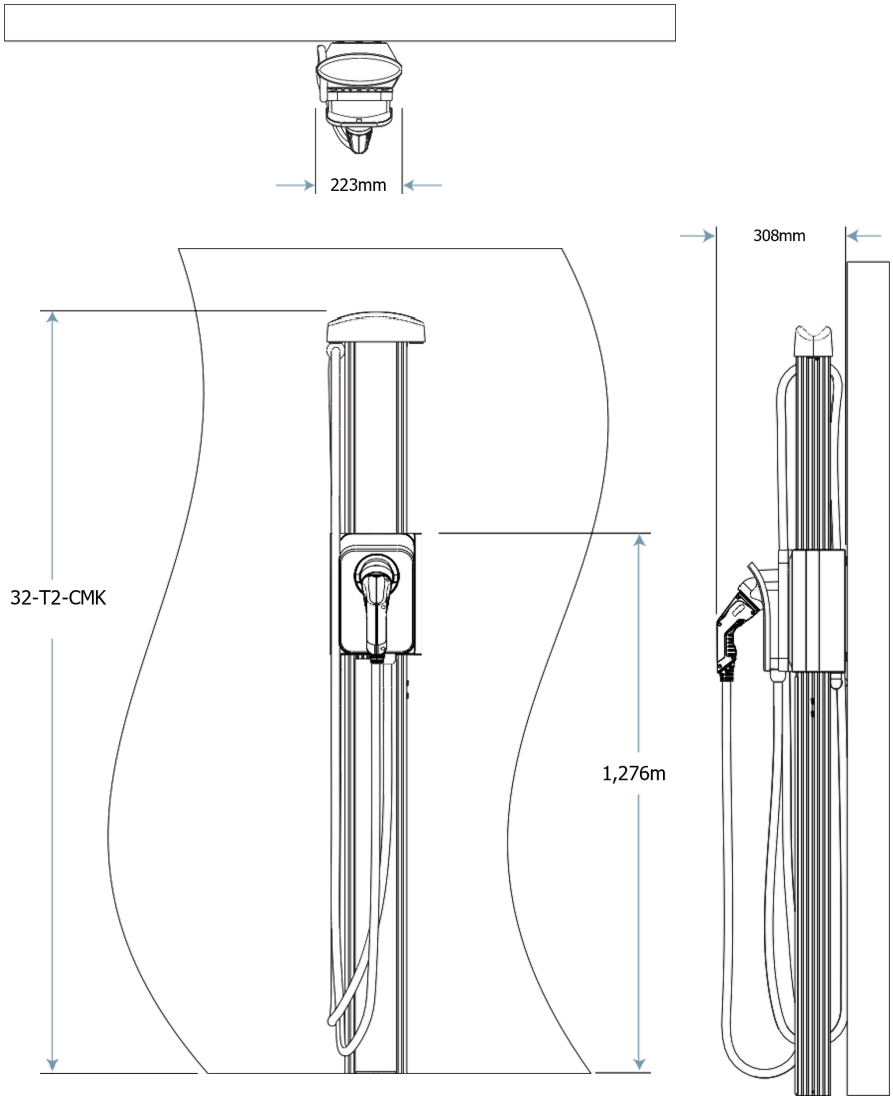

Single Pedestal Mount - CPF32-T2-L5.5 and Single Pedestal Mount with Cable Management Kit - CPF32-T2-L5.5-CMK-PD

Single Pedestal Mount - CPF32-T2-L5.5

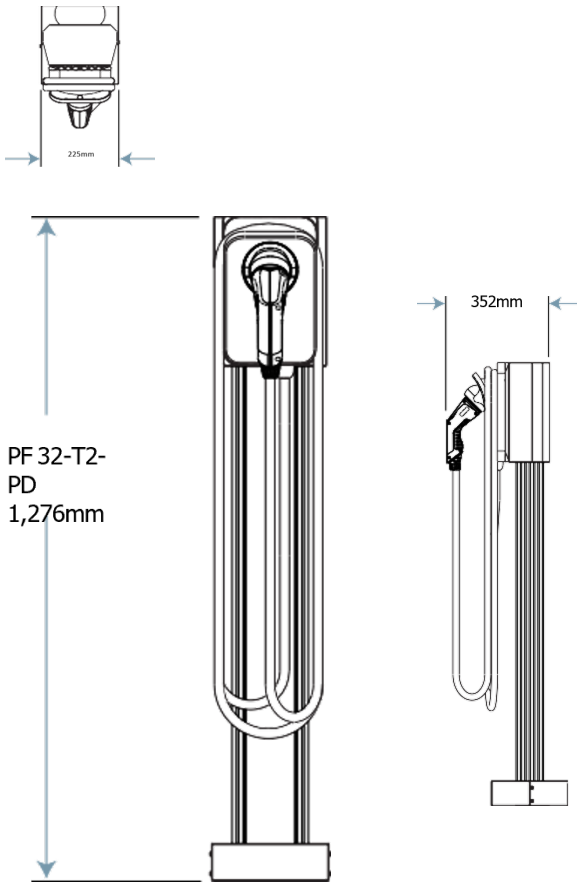

Single Pedestal Mount with Cable Management Kit - CPF32-T2-L5.5-CMK-PD

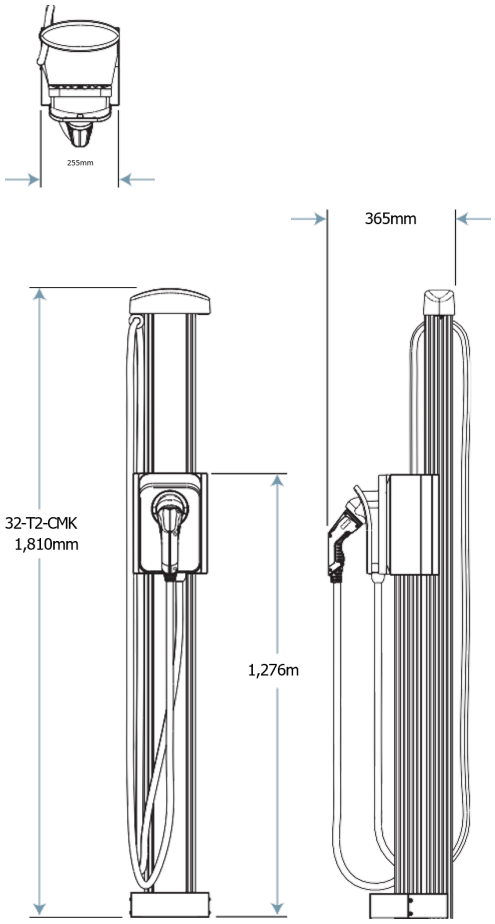

Two Stations with Dual Pedestal Mount - CPF32-T2-L5.5 and Two Stations with Dual Pedestal and Cable Management Kit - CPF32-T2-L5.5-CMK-PD-DUAL

Two Stations with Dual Pedestal Mount - CPF32-T2-L5.5

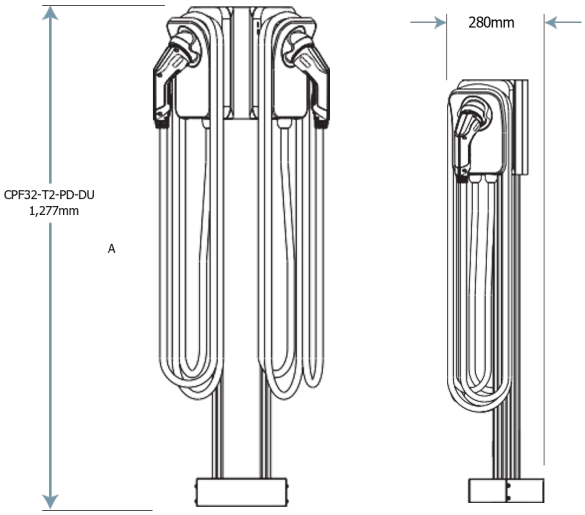

Two Stations with Dual Pedestal and Cable Management Kit - CPF32-T2-L5.5-CMK-PD-DUAL

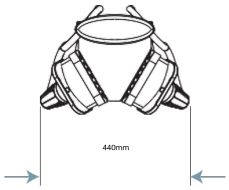

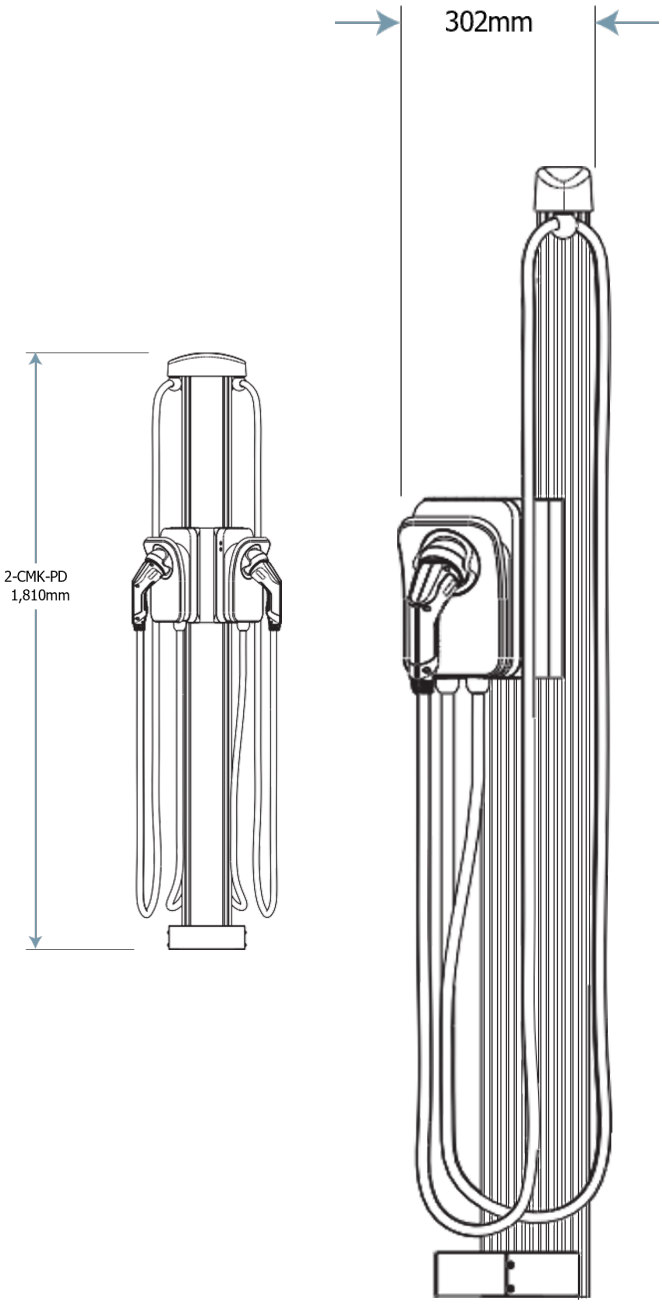

General Specifications

Electrical Input

Electrical Input	One Station (AC Voltage 230 V AC)			Two Stations (AC Voltage 240 V AC)		
	Input Current	Input Power Connection	Required Service Panel Breaker	Input Current	Input Power Connection	Required Service Panel Breaker
Standard	32A	One 32A circuit	32A RCD Type B	32A x 2	Two independent 32A circuits	32A x 2 RCD Type B
Standard Power Share	n/a	n/a	n/a	32A	One 32A circuit	32A RCD Type B
Power Select 16A	16A	One 16A circuit	16A RCD Type B	16A x 2	Two independent 16A circuits	16A x 2 RCD Type B
Wiring–Standard	3–wire (L1, Neutral,Earth)			5 – wire (L1,L1,N,N, Earth)		
Wiring–Circuit Share	n/a			L1, N, Earth		
Station Power	2,5 W typical (standby), 4 W maximum (operation)			5 W typical (standby), 8 W maximum (operation)		

Electrical Output

Standard	7,4 kW (230V AC 50 Hz single phase @ 32A)

Functional Interfaces

Connector Types	IEC 62196-2 Type 2 (32 A)
Cable Length – 1,8 m Cable Management	5,5 m
Card Reader	ISO 15693 and ISO 14443

Safety and Connectivity Features

Ground Fault Detection	20 mA CCID with auto-retry
Open Safety Ground Detection	Continuously monitors presence of protective earth conductor
Plug-Out Detection	Power terminated as per IEC61851 specifications
Power Measurement Accuracy	+/- 1.0% from 1% to full scale (32 A)
Power Report/Store Interval	15 minute, aligned to hour
Local Area Network	2.4/5 GHz Wi-Fi (802.11 a/b/g/n)
Wide Area Network	3G GSM provided by the ChargePoint Gateway CPGWx

Safety and Operational Ratings

Station Enclosure Rating	IP54
Safety Compliance	IEC 61851-1 (2010), IEC 61851-22 (2001), LVD 2014/35/EU
Surge Protection	6 kV @ 3000A. In geographical areas subject to frequent thunderstorms, supplemental surge protection at the service panel is recommended.
EMC Compliance	EMCD 2014/30/EU, RED 2014/53/EU
Storage Temperature	-40°C to +60°C (-40°F to 140°F)
Operating Temperature	-30°C to +50°C (-22°F to 122°F)
Operating Humidity	Up to 85% @ +50°C (122°F) non-condensing
Non-Operating Humidity	Up to 95% @ +50°C (122°F) non-condensing
Maximum Charging Stations per 802.11 Radio Group	9 maximum. Each station must be located within 38 m “line of sight” of a CPGWx gateway.

Indicators

WiFi LED	Yes
Fault Indicator per UL	Yes
Status LED	Yes

Contact Us

ChargePoint, Inc.
254 East Hacienda Avenue Campbell, CA 95008-6617 USA +1.408.841.4500 or +1.877.370.3802 US and Canada toll-free

Visit chargepoint.com Call +1.408.705.1992
Email sales@chargepoint.com

Copyright © 2019 ChargePoint, Inc. All rights reserved. CHARGEPOINT is a U.S. registered trademark/service mark, and an EU registered logo mark of ChargePoint, Inc. All other products or services mentioned are the trademarks, service marks, registered trademarks or registered service marks of their respective owners.

chargepoint.com/support

ChargePoint, Inc. reserves the right to alter product offerings and specifications at any time without notice, and is not responsible for typographical or graphical errors that may appear in this document.

CHARGEPOINT is a trademark of ChargePoint, Inc.